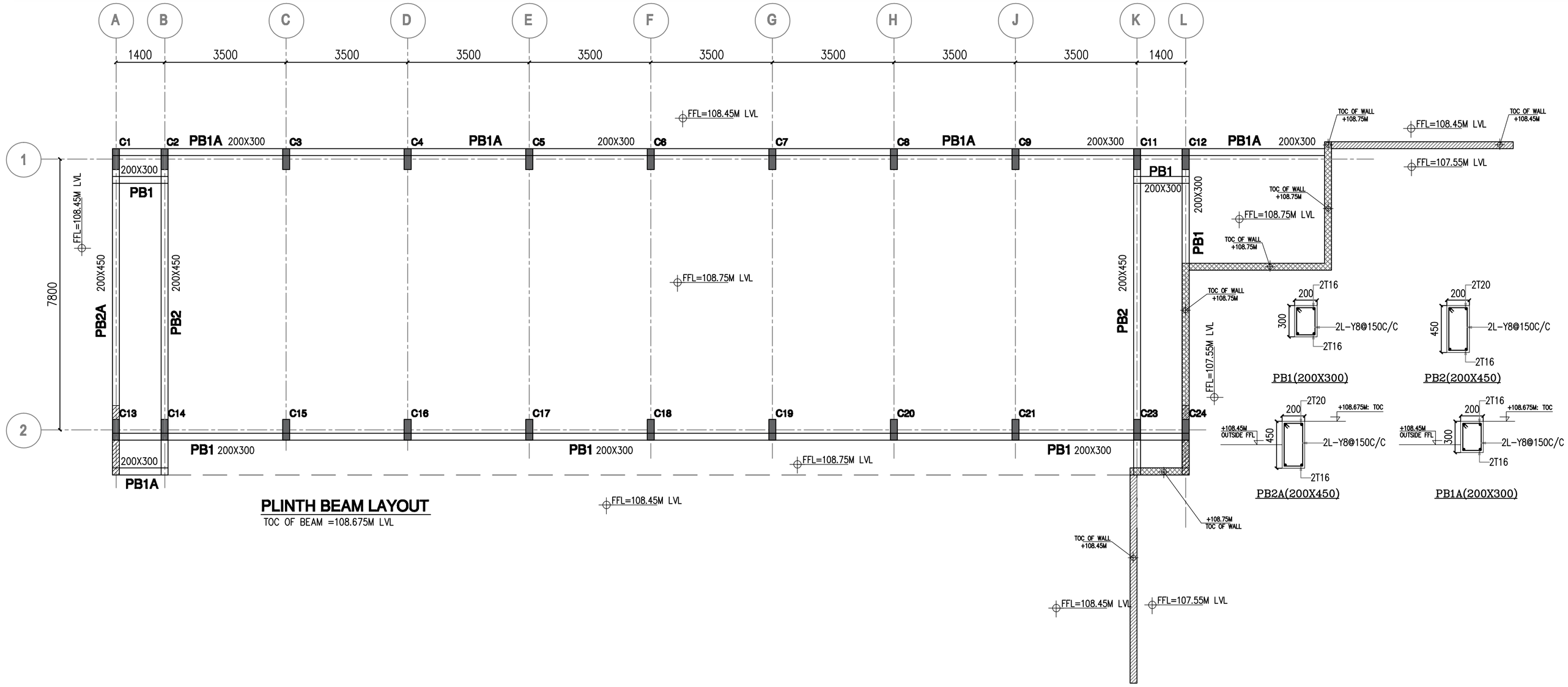

PLINTH BEAM LAYOUT

TOC OF BEAM =108.675M LVL

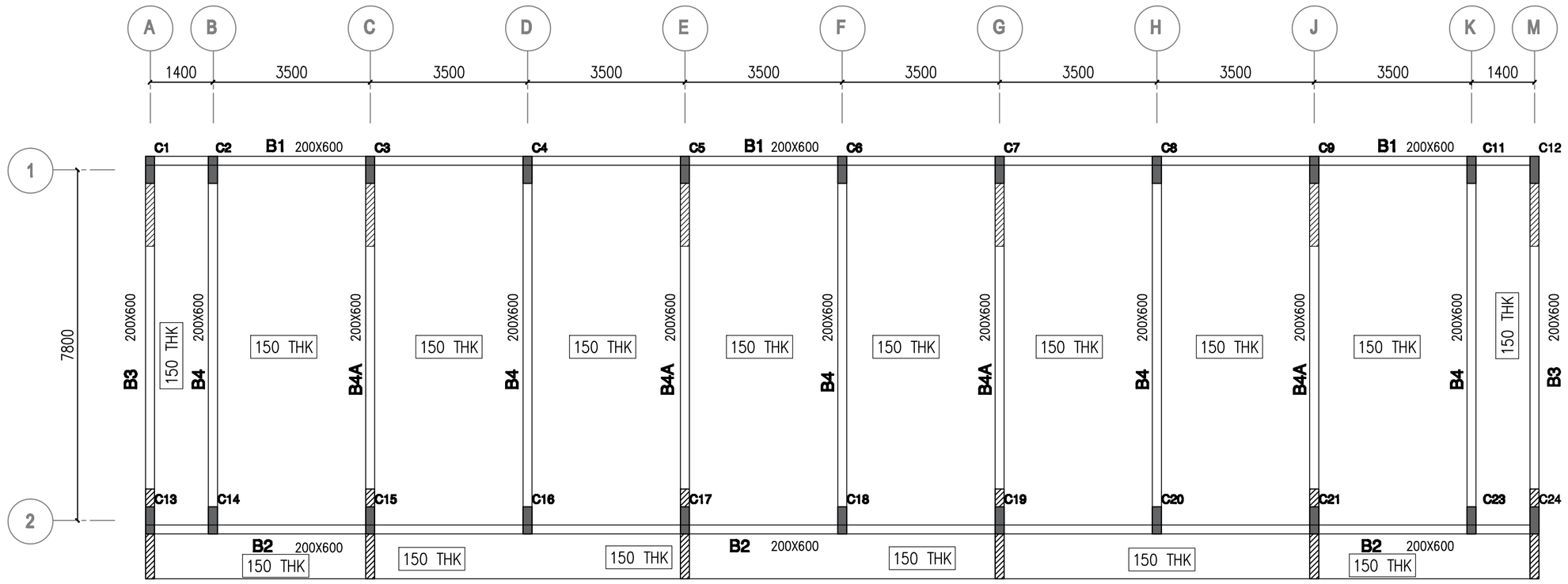

TERRACE SHUTTERING LAYOUT

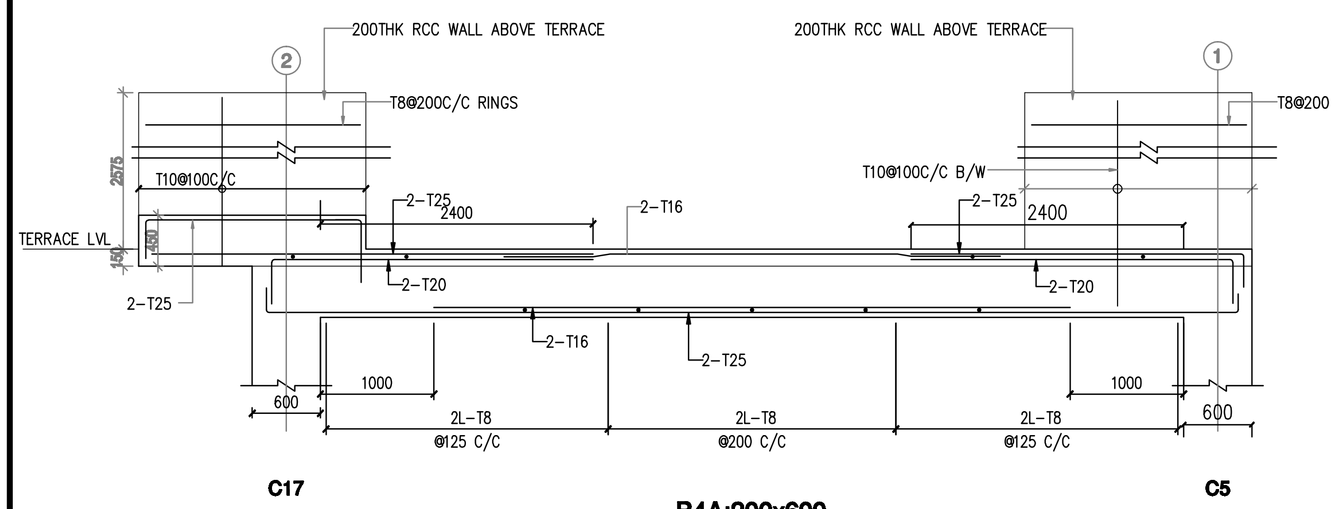

B4A:200x600

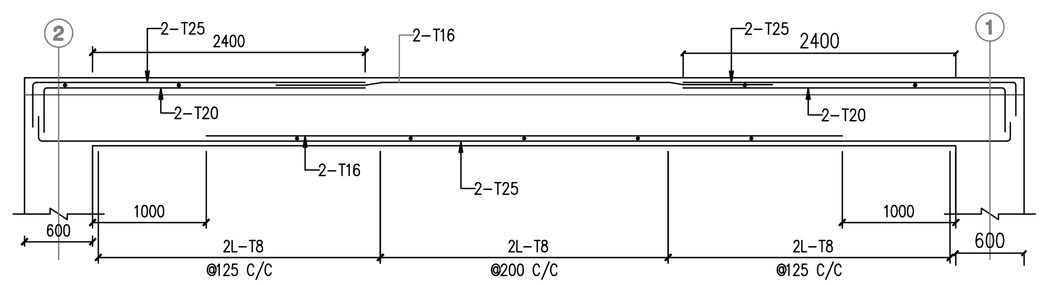

B3/B4:200x600

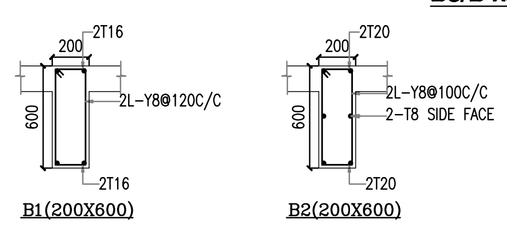

B1(200X600) B2(200X600)

KEY PLAN

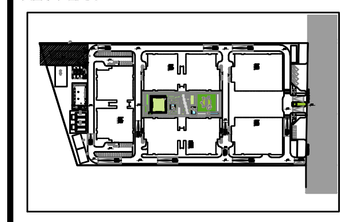

GENERAL NOTES:

1. ALL DIMENSION ON THIS DRAWING ARE IN MILLIMETERS.
2. ONLY WRITTEN DIMENSIONS ARE TO BE FOLLOWED. DRAWING SHOULD NOT BE SCALED UNDER ANY CIRCUMSTANCES.
3. ALL MEASUREMENTS MUST BE CHECKED AND VERIFIED BY THE CONTRACTORS PRIOR TO EXECUTION OF WORK AT SITE.

CLEINT :

GV RESEARCH CENTERS PVT LTD.
Plot No.3, Sy.No.230 to 243
Turkapally, Shamirpet

TECHNICAL ADVISOR
PRIME CONSULTANT

Koncepo
Strategy | Planning | Develop

Koncepo Scientech International Private Limited
2nd Floor, BNR Towers, 91/A, HP Avenue,
Electronic city Phase I, Bangalore - 560100
T: +91-80-61920078
F: +91-80-61920088
Email: marketing@koncepo.com
www.koncepo.com
| North America | Singapore | China |

ARCHITECT

m a r c h i t e c t s pvt.ltd.
Jaipur - Bangalore - Hyderabad
Plot No. -1, greenwoods, Lal Kothi Scheme,
off Sahkar Marg,Jaipur-302001
Tel : 91 141 4299999,
email - studio@mearchitects.in web-www.mearchitects.in

STRUCTURAL CONSULTANT

Dixcons Consulting Engineers
#7,GF, Rohini Enclave, 14th main, 1st cross
Uttrahalli Main Road,Bangalore-61.
Ph:26395244

MEP CONSULTANT

SYS.N Consultants Private Limited
#1441/A/40 39th E Cross Road,
4th T Block Jayanagar,
Bangalore 560041
PH NO:- 08022455204 /8884433406 Email :
info@sysnconsultants.com

REV.	DATE	DESCRIPTION
R1	20-02-2019	LEVELS REVISED AS PER ARCH DWG

REV	DATE	DESCRIPTION

PROJECT : GVRC

DRAWING TITLE : PLINTH BEAM AND TERRACE LVL DETAILS
BUILDING - 5600 (NUCLEUS MODULE)

PROJ. NO: 081	DATE: 04.02.2019
DRAWING NO: KSI-GVRC-SS-SD-002-Rev 01	

SD02	SCALE	SHEET NO 01 OF 01

DRAWN	DESIGNED	APPROVED BY
YOGU	GIRISH R PATIL	S.KRISHNAMURTHY