PRODUCED BY AN AUTODESK STUDENT VERSION

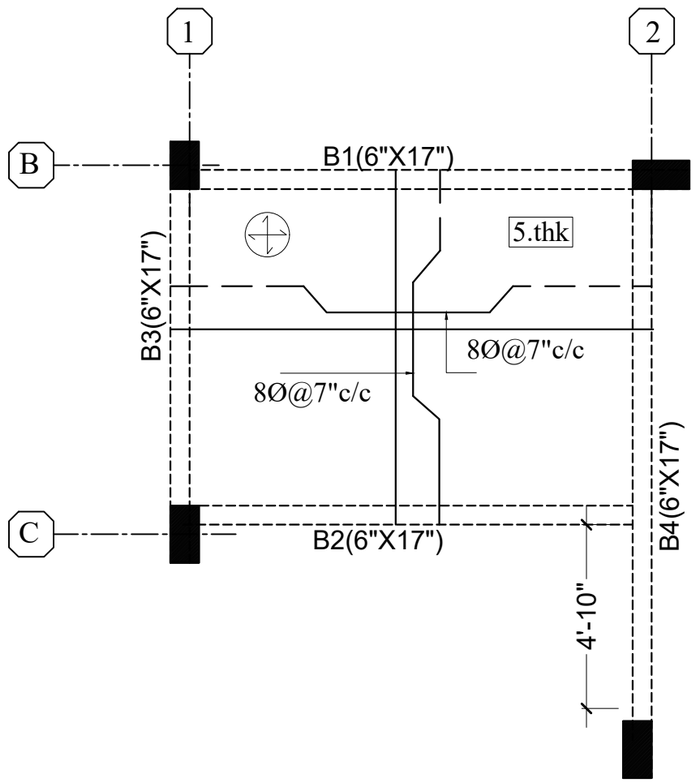

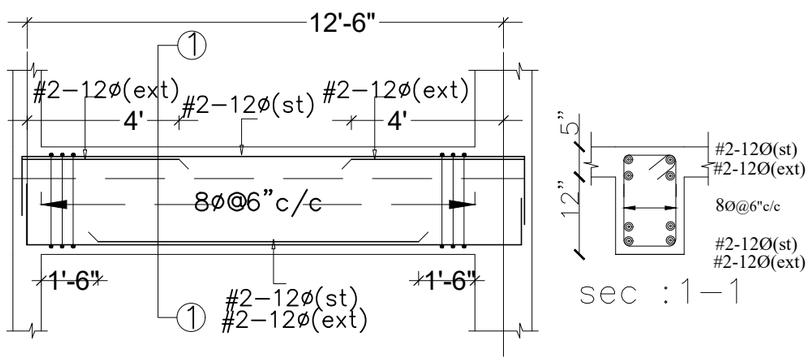

B1(6"x17")

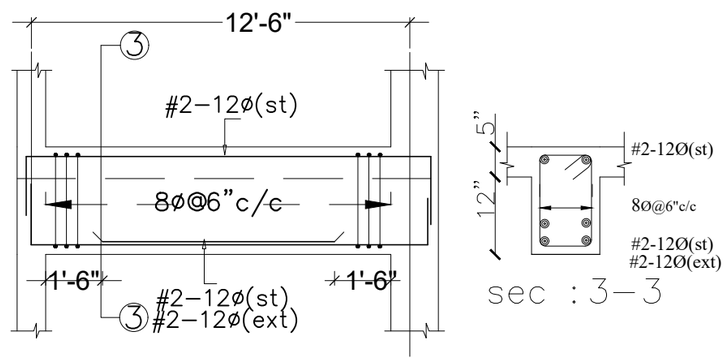

B3(6"x17")

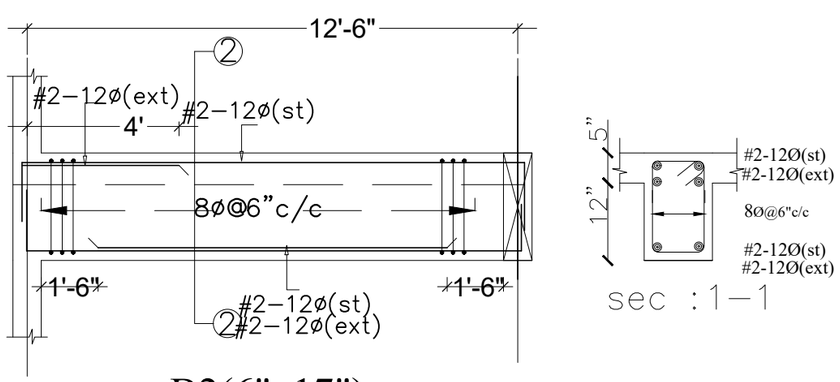

B2(6"x17")

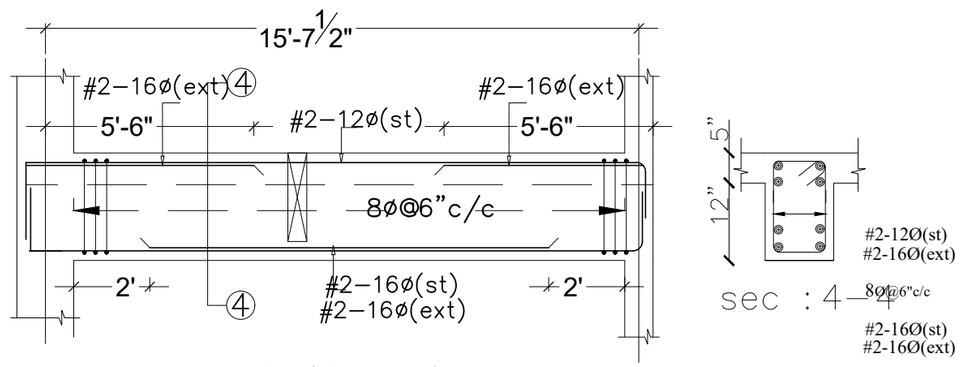

B4(6"x17")

General Notes :−−

1. Use M20 (1:1.5:3) for slab & Beams
2. Use FE 500 grade tor steel.
3. Provide clear cover of 1"for beams $\frac{3}{4}$"slab
4. Read horizontal beam from left to right & vertical beam from bottom to top.
5. crank +ve bars at L/4 th of span & extend -ve bars L/5 th of span.
6. Do not over lap bottom rods at center and top rods at support.

DESCRIPTION	DATE

N

Client	MODI PROPERTIES & INVESTMENTS PVT.LTD
Project	MIRYALGUDA - A1 (3 BHK)
Architects	Architectural Associates — ARCHITECTS & INTERIOR DESIGNERS — 8-1-383, R.P.Road, Secunderabad-3 — subashanandsagar@hotmail.com
STRUCTURAL CONSULTANT	KULKARNI CONSULTANT'S — STRUCTURAL ENGINEERS, ARCHITECTS & PROJECT CONSULTANT'S #216, KUBERA TOWER'S, NARAYAN GUDA,HYDERABAD. CONTACT NO'S:- 04023223891, 09246343724, 09246343720.

DATE	17-11-2017	TYPE − A1 − 3 BHK	
DEALT BY	PAWAN	TITLE:	STAIRCASE HEAD ROOM SLAB & BEAM DETAILS
DESIGN BY	SANTOSH		
CHECKED& APPROVED :	KULKARNI	DWG. NO.	KC/MG/SD/A1/3
		REV. No.	

PRODUCED BY AN AUTODESK STUDENT VERSION
PRODUCED BY AN AUTODESK STUDENT VERSION
PRODUCED BY AN AUTODESK STUDENT VERSION