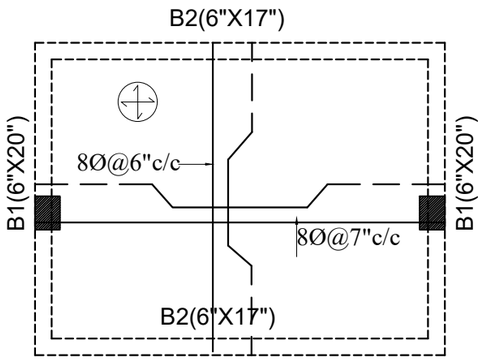

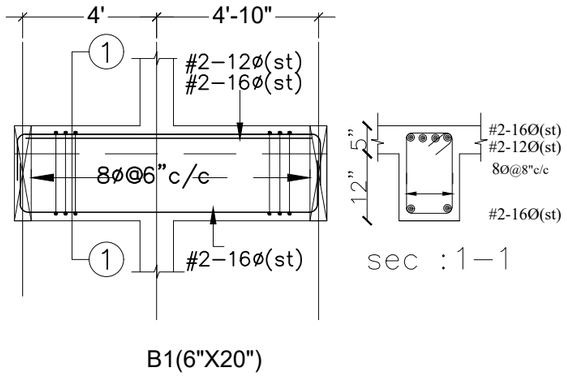

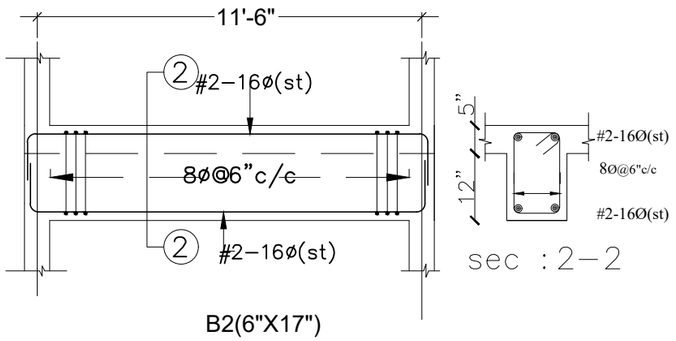

General Notes :--

1. Use M25 (1:1:2) grade for columns & M20 (1:1.5:3) for footings,slab & Beams
2. Use FE 500 grade tor steel.
3. Provide clear cover of 2" for footings & 1.5" for columns.
4. S.B.C of the Soil is taken as 250kn/m2.
5. Footings are desigen for Ground & Upeer 2 floor.
6. Provide clear cover of 1"for beams
7. Read horizontal beams from left to right & vertical from bottom to left.
8. crank +ve bars at L/4 th of span & extend -ve bars L/5 th of span.
9. Do not over lap bottom rods at center and top rods at support.
10. Slab thickness

DESCRIPTION	DATE

GOOD FOR CONSTUCTIONS

N

Client	MODI PROPERTIES & INVESTMENTS PVT.LTD
Project	MIRYALGUDA - A1 3BHK (VILLA 6&7)
STRUCTURAL CONSULTANT	KULKARNI CONSULTANT'S STRUCTURAL ENGINEERS, ARCHITECTS & PROJECT CONSULTANT'S #216, KUBERA TOWER'S, NARAYAN GUDA,HYDERABAD. CONTACT NO'S:- 04023223891, 09246343724, 09246343720.

DATE	18-04-2018	MIRYALGUDA TYPE (A1)VILLA 6&7	
DEALT BY	PAWAN	TITLE:	STAIRCASE HEAD ROOM SLAB & BEAM DETAILS
DESIGN BY	SANTOSH		
CHECKED& APPROVED :	KULKARNI	DWG. NO. KC/SD/A1/	REV. No. 1