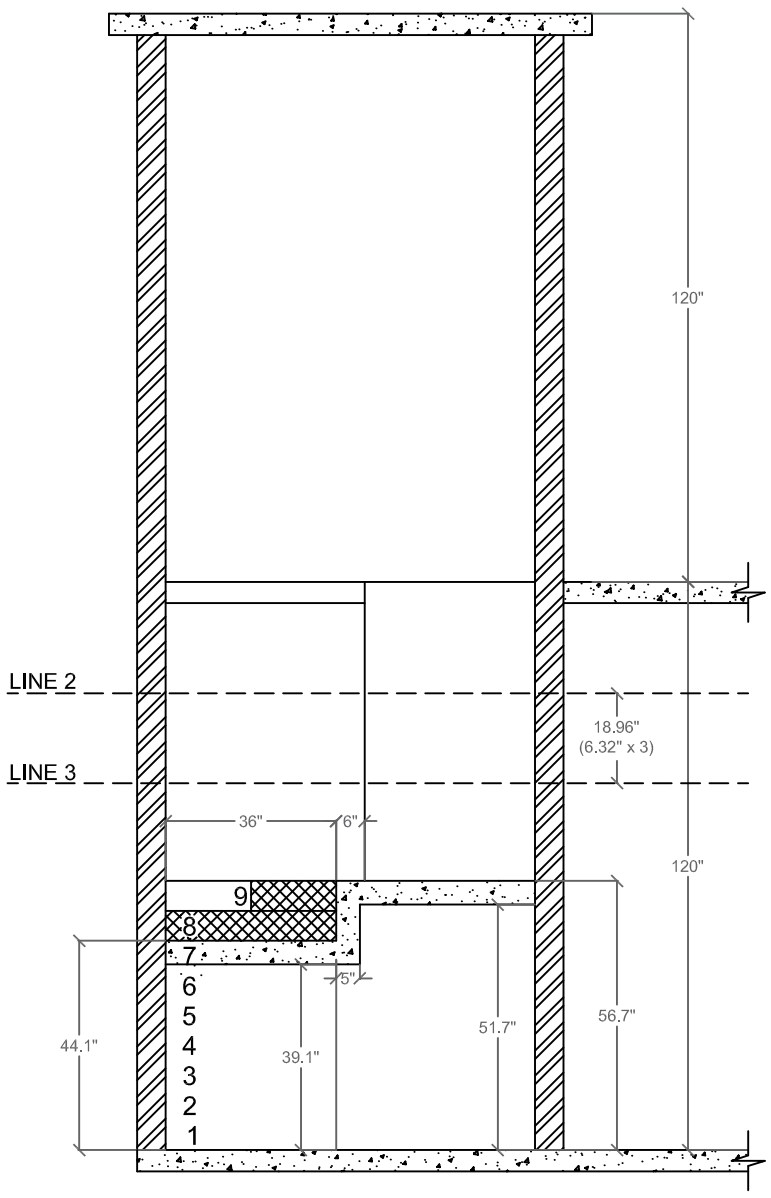

SECTION - C C'

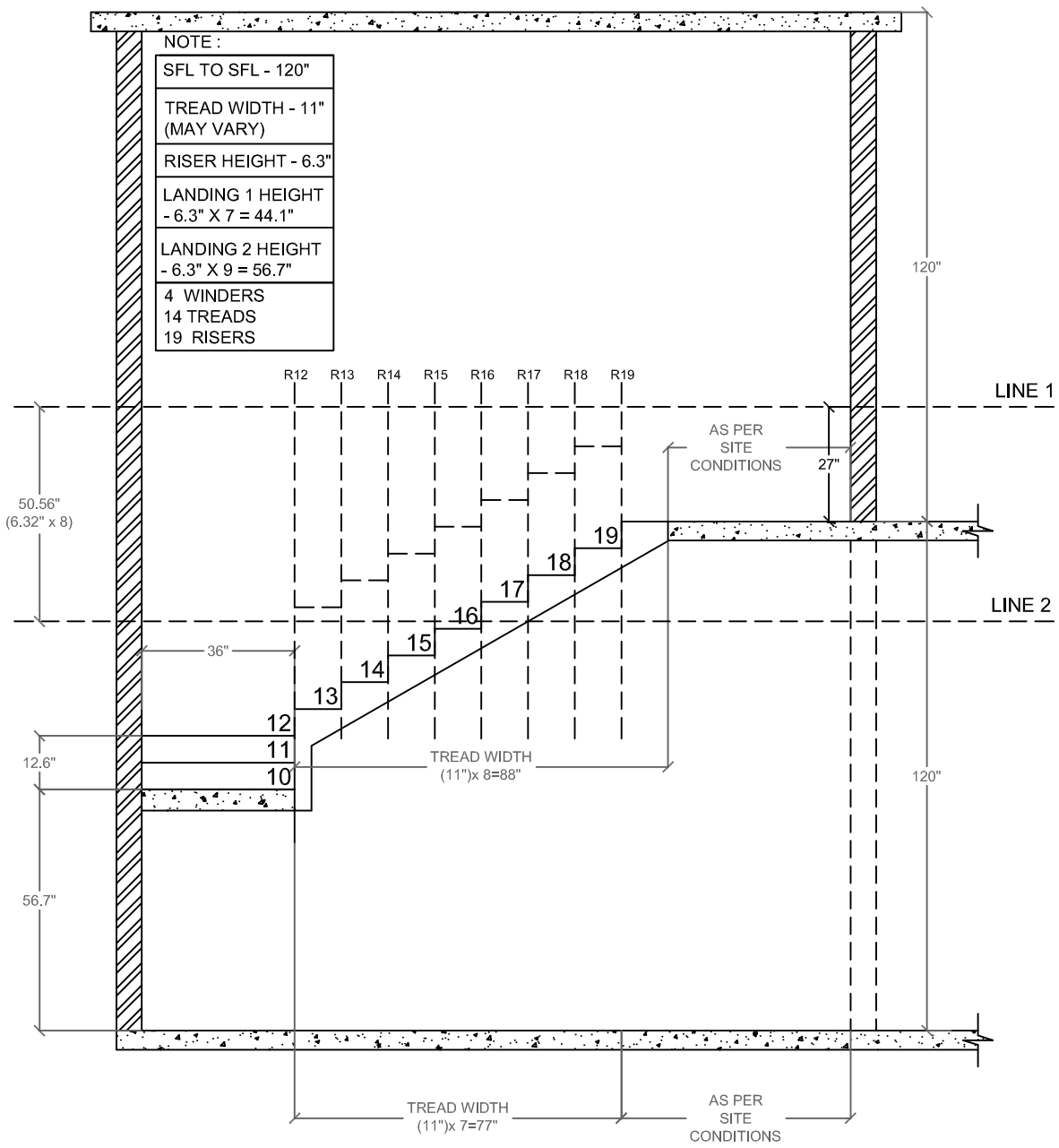

SECTION - A A'

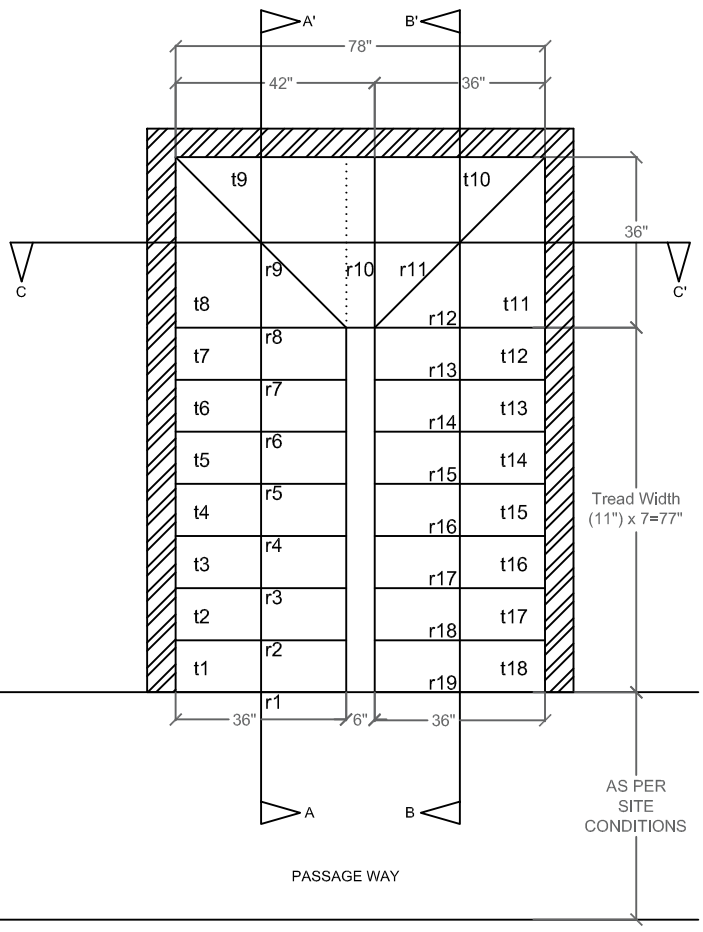

PLAN

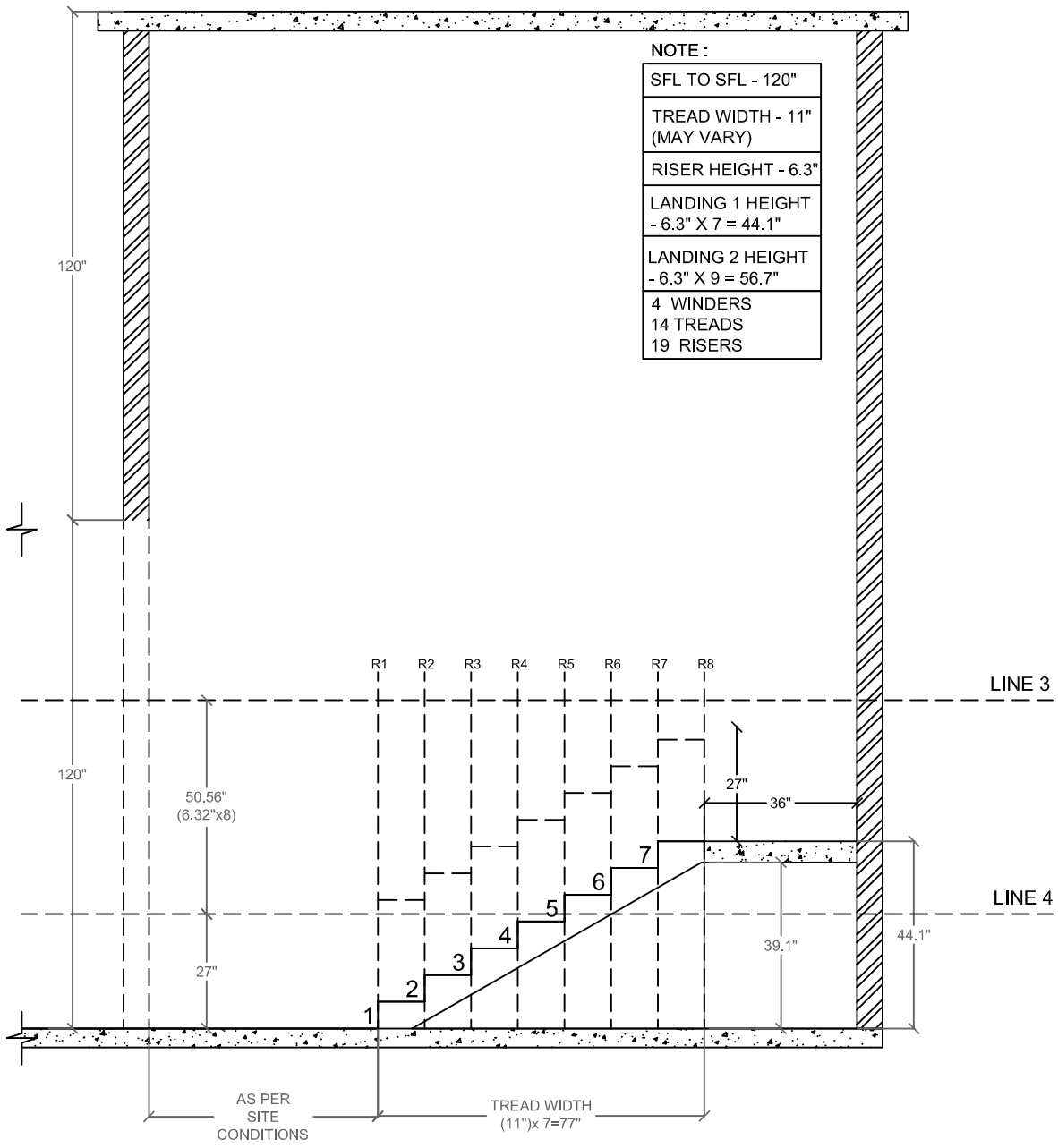

SECTION - B B'

NOTE :

SFL TO SFL - 120"
TREAD WIDTH - 11" (MAY VARY)
RISER HEIGHT - 6.3"
LANDING 1 HEIGHT - 6.3" X 7 = 44.1"
LANDING 2 HEIGHT - 6.3" X 9 = 56.7"
4 WINDERS 14 TREADS 19 RISERS

Description	Direction	Owners & Developers :	Date :	04/06/18	Promoted by
STAIRCASE DRAWING - FOR VILLAS MARKING PLAN		Modi Properties Pvt Ltd.	Prepared By :	Madhav	Modi Properties Pvt. Ltd.
		Project Name & Phase :	Approved By :	Soham Modi	Phone:+91-40-66335551
			Scale :	N.T.S	