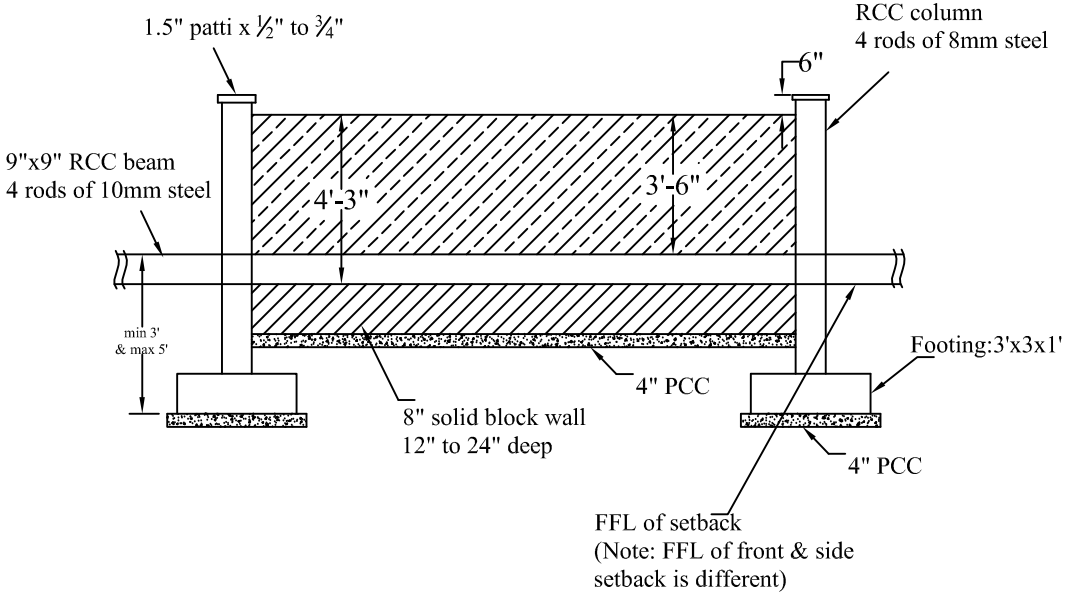

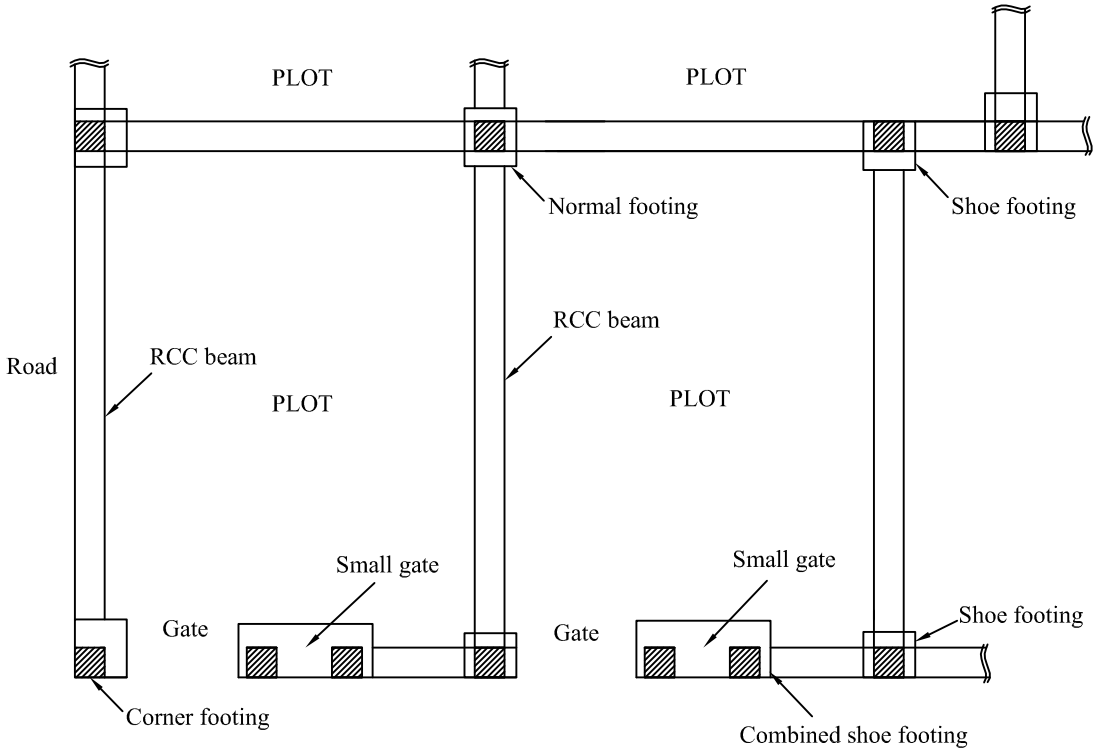

Description	Direction	Date :	05.05.18	Promoted by
STANDARD COMPOUND WALL DETAILS FOR VILLA PROJECTS	N	Approved By :	Soham Modi	Modi Properties Pvt.Ltd.
		Prepared By :	Rahul	Phone:+91-40-66335551
		Scale :	N.T.S	