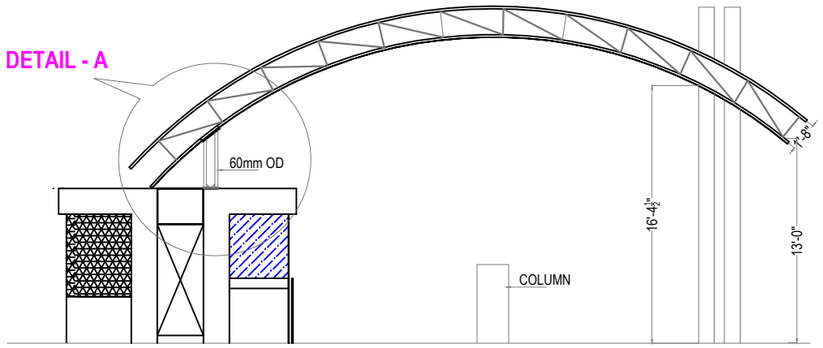

ELEVATION

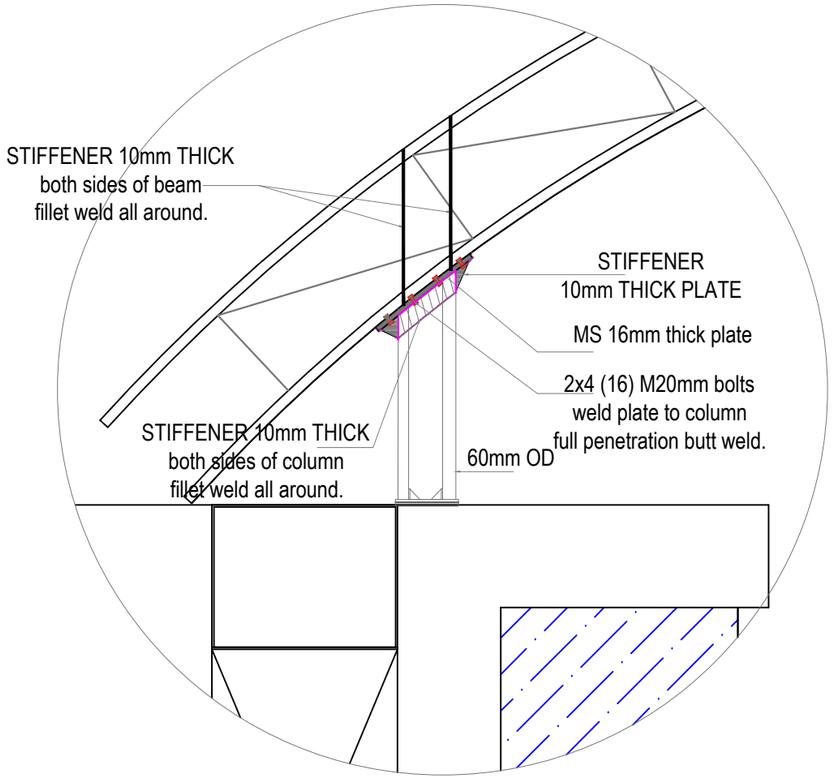

DETAIL - A

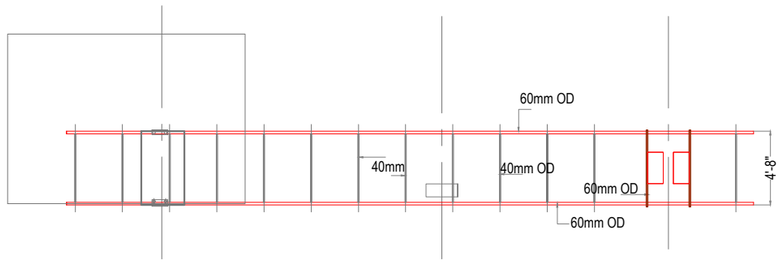

ENTRENCE ARCH PLAN

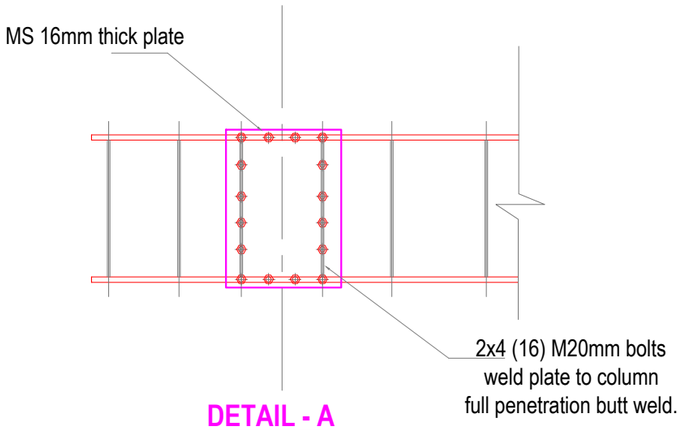

DETAIL - A
PLAN

General Notes :--

1. Use M25 (1:1:2) grade for columns & M20 (1:1.5:3) for footings,slab & Beams
2. Use FE 500 grade tor steel.
3. Provide clear cover of 2" for footings & 1.5" for columns.
4. S.B.C of the Soil is taken as 200kn/m2.
5. Provide clear cover of 1"for beams
6. All loose pockets should be filled by p.c.c (1:2:4).
7. Rock foundation should have anchor rods in the rock .

	DESCRIPTION	DATE

FOR RFERENCE

Client	MODI PROPERTIES & INVESTMENTS PVT.LTD
Project	MIRYALGUDA - ENTRENCE ATCH
STRUCTURAL CONSULTANT	KULKARNI CONSULTANT'S STRUCTURAL ENGINEERS, ARCHITECTS & PROJECT CONSULTANT'S #216, KUBERA TOWER'S, NARAYAN GUDA,HYDERABAD. CONTACT NO'S:- 04023223891, 09246343724, 09246343720.

DATE	30-11-2018
DEALT BY	Basha
DESIGN BY	SANTOSH
CHECKED& APPROVED :	KULKARNI

TITLE: ARCH DETAILS

DWG. NO. KC/MG/SD/12

REV. No. 0