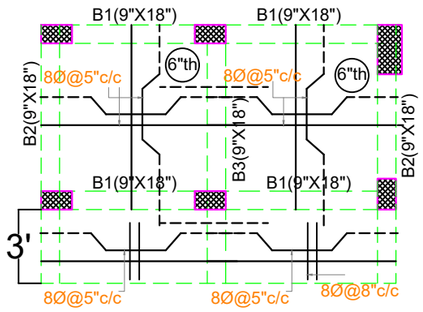

BOTTOM SLAB (LIFT ROOM)

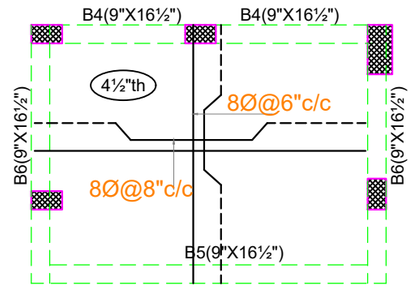

TOP SLAB (LIFT ROOM)

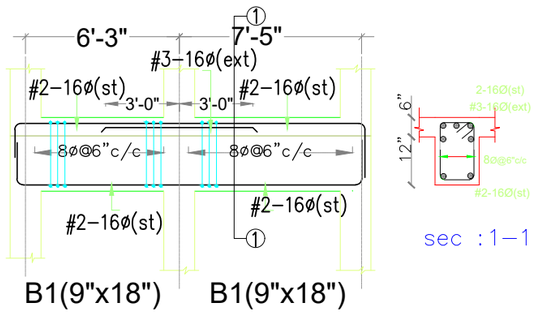

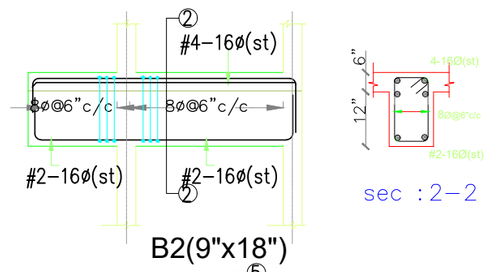

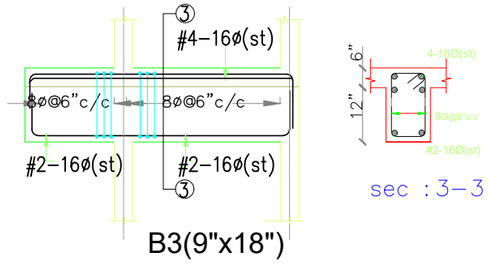

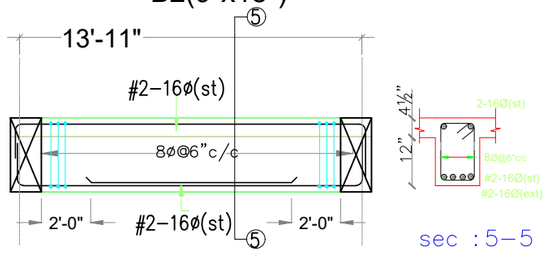

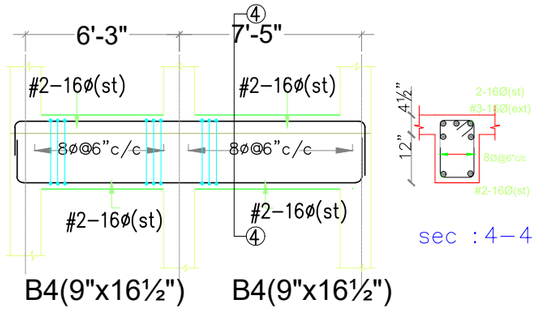

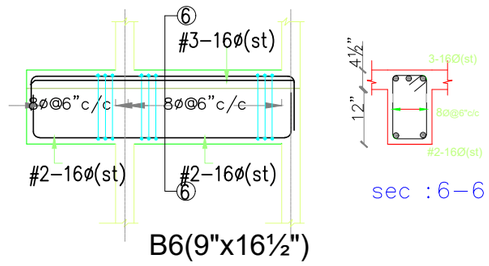

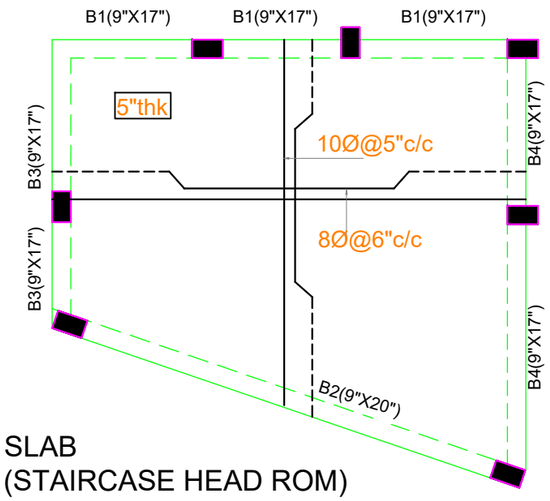

SLAB
(STAIRCASE HEAD ROM)

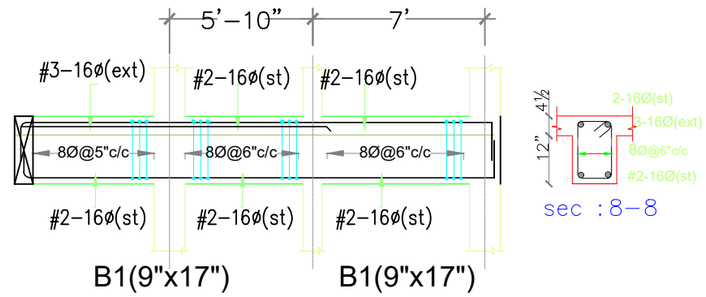

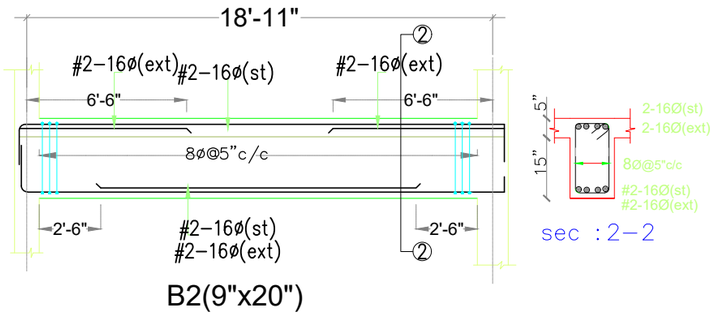

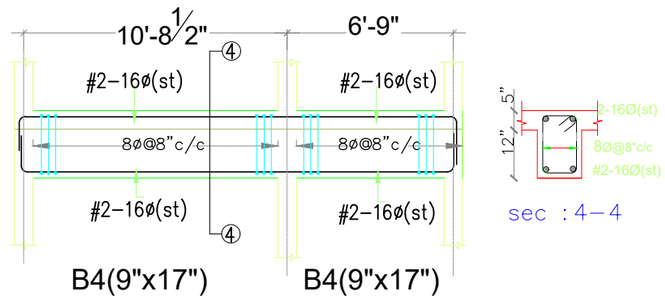

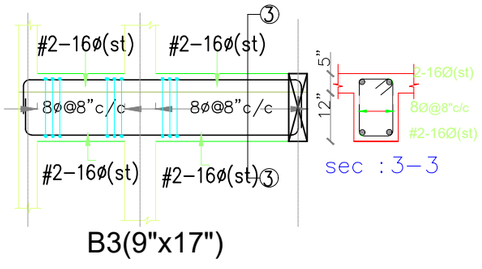

NOTE :

1. USE M25 (1:1:2) GRADE CONCRETE FOR COLUMNS & M20 (1:1.5:3) FOR BEAMS & SLAB
2. USE FE500 GRADE TOR STEEL.
3. PROVIDE CLEAR COVER OF 1.5" FOR COLUMNS , 1"FOR BEAMS & 3/4" FOR SLAB
4. PROVIDE 1" CAMBER AT FREE END FOR CANTILEVER BEAMS & SLABS.
5. IN SLAB EXTEND –VE STEEL UPTO 0.30L FROM FACE OF SUPPORT.
6. DO NOT PROVIDE EXTRA REINFORCEMENT AT SIMPLY SUPPORTS.
7. LAP LENGTH 48 D (D– IS THE DIA OF THE BAR) IN COMPRESSION.
8. LAP LENGTH 52 D(D– IS THE DIA OF THE BAR) IN TENSION.
9. ONLY FIGURED DIMENSIONS SHALL BE FOLLOWED.
10. ALL THE DIMENSIONS ARE IN INCHES & FEETS.
11. DO NOT SCALE THE DRAWING.
12. REFER ARCHITECT DRAWING FOR CENTER LINE DIMENSIONS.
13. LAP LENGTH INCLUDING ANCHORAGE VALUE OF HOOKS FOR BARS IN FLEXURAL TENSION SHALL BE Ld OR 30ø WHICHEVER IS GREATER. THE STRAIGHT LENGTH OF THE LAP SHALL NOT BE LESS THAN 15ø OR 200mm, WHEN BARS OF TWO DIFFERENT DIAMETERS ARE TO BE SPLICED, THE LAP LENGTH SHALL BE CALCULATED ON THE BASIS OF DIAMETER OF THE SMALLER BAR.
14. LAP / DEVELOPMENT LENGTH FOR MAIN REINFORCEMENT BARS FOR DIFFERENT GRADES OF CONCRETE MIX SHALL BE AS FOLLOWS:

STEEL GRADE	M20	M25	M30	M35
Fe 415	47 d	41 d	38 d	34 d
Fe 500	57 d	49 d	46 d	40 d

WHERE d IS THE DIAMETER OF THE BAR.

DESCRIPTION	DATE

Client: MODI PROPERTIES & INVESTMENTS PVT.LTD

Project: NILAGIRI ESTATE AT RAMPALLY, PHASE - II

STRUCTURAL CONSULTANT: KULKARNI CONSULTANT'S
STRUCTURAL ENGINEERS, ARCHITECTS & PROJECT CONSULTANT'S
#216, KUBERA TOWER'S, NARAYAN GUDA,HYDERABAD.
CONTACT NO'S:- 04023223891, 09246343724, 09246343720.

DATE	12-9-2016
DEALT BY	PAWAN
DESIGN BY	SRIKANTH
CHECKED& APPROVED	KULKARNI

CLUB HOUSE

TITLE: (LIFT MACHINE ROOM & STAIRCASE HEAD ROOM SLAB)

DWG. NO. KC/MBC/SD/CH/16

REV. No. 0