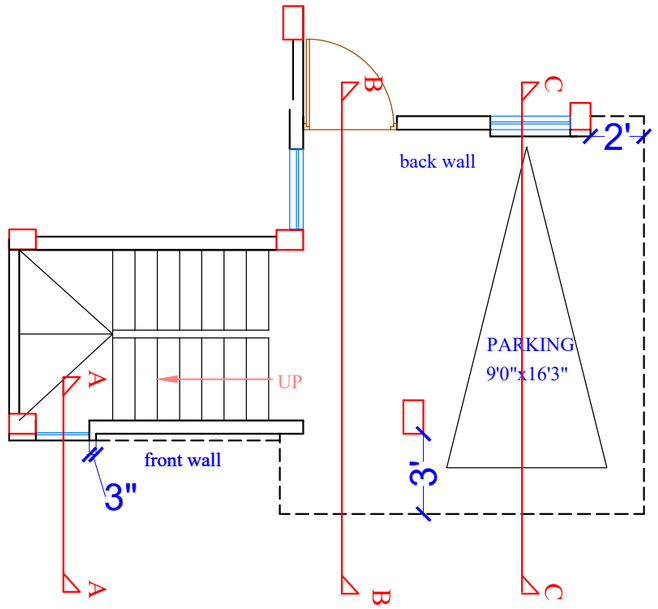

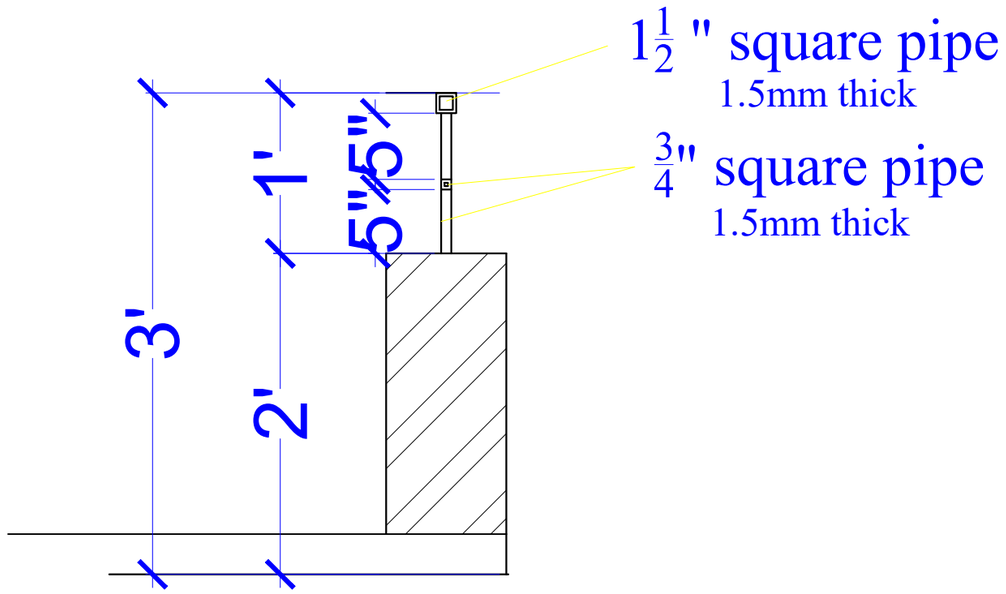

DETAIL @ A

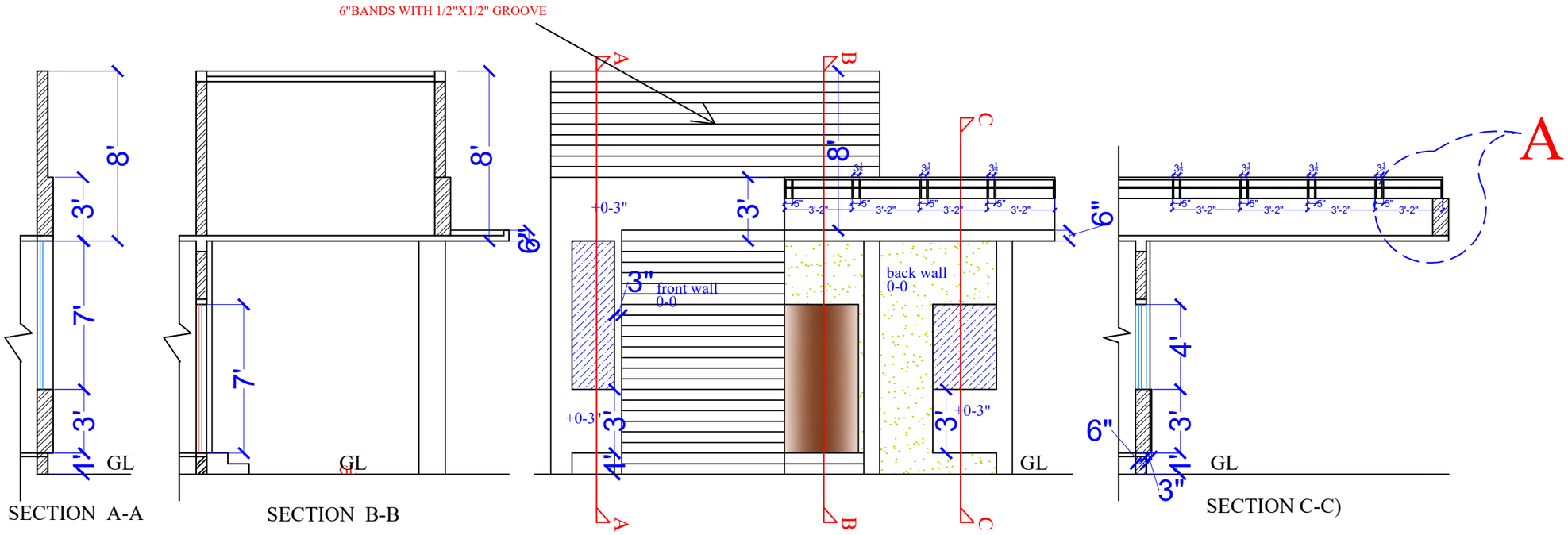

Description	Direction	Owners & Developers :	Date :	09.08.2017	Promoted by
TYPE-AA1(SINGLE) ELEVATION RAILING DETAIL	N	Modi & Modi Constructions	Prepared By :	Rahul	Modi Properties & Investments Pvt. Ltd.
		Project Name & Phase :	Approved By :	Soham Modi	
		Nilgiri Estate	Scale :	N.T.S	Phone:+91-40-66335551