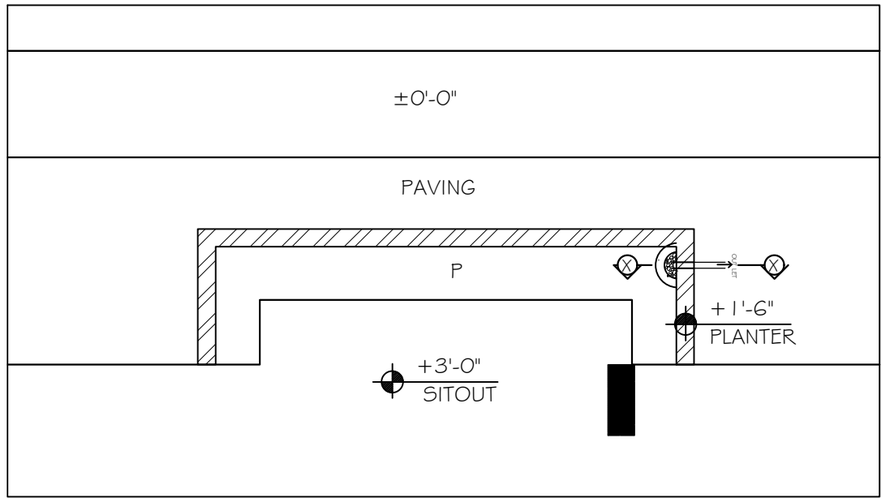

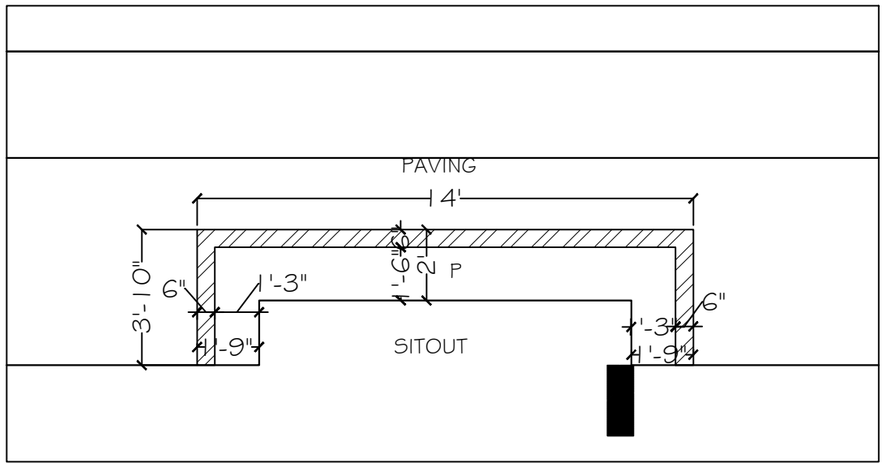

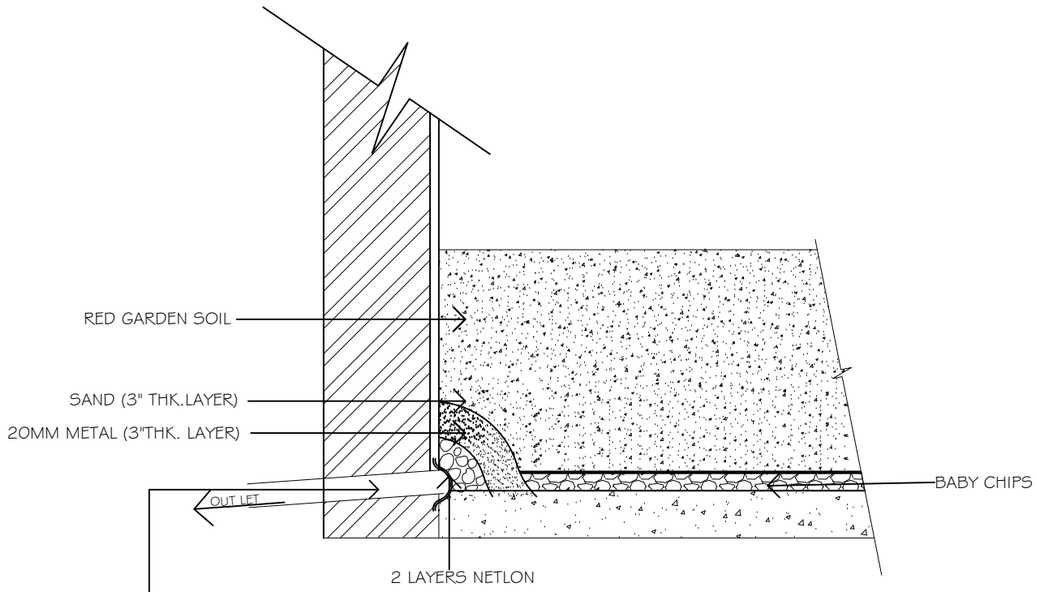

SECTION (PLANTER)

Drain outlet 2" Ø PVC pipe fixed@ in side planter FFL level .with slope towards outside pipe to have nelton mosquito cover on either side covering the opening

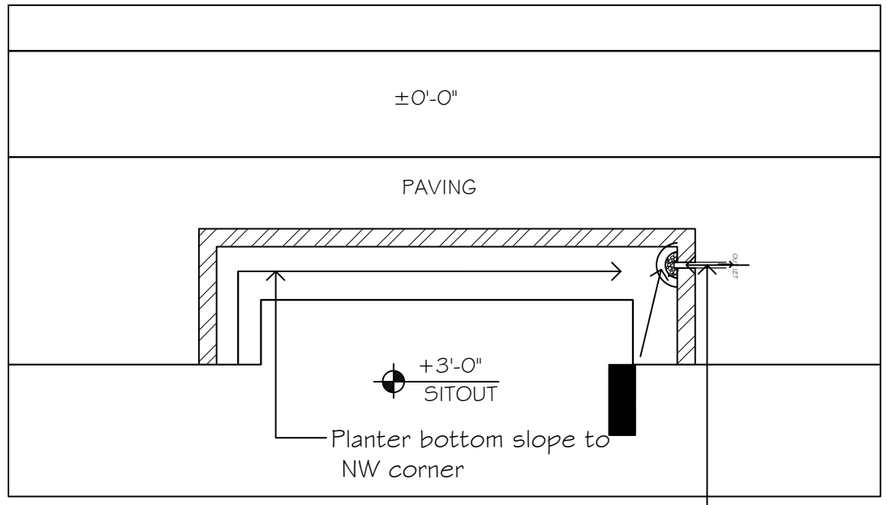

Drain outlet 2" Ø PVC pipe fixed@ in side planter FFL level .with slope towards outside pipe to have nelton mosquito cover on either side covering the opening

THIS DRAWING IS THE PROPERTY OF M/S K.B.CONSULTANTS, HYD.AND IS NOT TO BE COPIED OR USED WITHOUT PRIOR PERMISSION.

GENRAL NOTES:

ALL QUERIES SHALL BE ADDRESSED TO LANDSCAPE CONSULTANT.

THIS DRAWING SHALL NOT BE MEASURED AND ONLY WRITTEN DIMENSIONS SHALL BE FOLLOWED.

ALL DIMENSIONS SHALL BE CO-RELATED WITH STRUCTURAL AND SERVICE DRAWINGS AND ANY AMBIGUITY SHALL BE IMMEDIATELY BROUGHT TO THE NOTICE OF THE ARCHITECT BEFORE THE COMMENCEMENT OF WORK.

THIS DRAWING SHALL SUPERCEDE ITS PREVIOUS REVISIONS.

SPECIFIC NOTES:

date of rev	description of revisions	rev no.

REVISIONS

PROJECT : MODI VISTAS

CLIENT: MODI PROPERTIES & INVESTMENTS PVT .LTD

ARCHITECT	SRI
CHECKED	GSP
DRAWN	SATYA

LANDSCAPE CONSULTANT
K.B.CONSULTANTS
landscape architect & envrl.planner
#PLOT NO 47,SUPRIYA NIVAS,
FLAT NO 301 ,SAGARSOCIETY,RD-NO 2
BANJARAHILLS, HYDERABAD-500 034.
email : sri123office@gmail.com
Contact : 7569410481/9985301965

PURPOSE OF RELEASE
FOR APPROVAL ONLY

STAGE:	C.BLOCK PITS STAGE	
DIRECTION:	DRAWING NO:	CURRENT REVISION: R2
START DATE: 19-MAY-12	ISSUE DATE: 19-06-12	LAST SAVED DATE: 5-Aug-14
SCALE	1"-8'.0"	
BLDNG/BLOCK:	-	
FLOOR:	GROUND FLOOR PLAN	
DRAWING TITLE:	ENTRANCE AREA-PLANTER	
FILE PATH:	\\192.168.0.3\Shaw Documents of AutoCad\AutoCad Files\Vista Homes\H.O.Plans\Landscaping\Landscape\MODI VISTA-flooring details(01-08-14).dwg	

THIS DRAWING IS THE PROPERTY OF THE CONSULTANTS AND THIS IS NOT TO BE USED AND OR COPIED WITHOUT PRIOR PERMISSION.