MAYFLOWER PLATINUM

Survey no. 82/1, Mallapur, Hyderabad – 500 076.
Owned & Developed by: M/s. Modi Properties Pvt. Ltd.
Head office; 5-4-187/3&4 M G Road Secunderabad.

Details of Additions & Alterations

Flat No	605	Block no.	'A'
Flat Area	1500 sft	Type	Deluxe / Luxury ✓
Buyer Name	Mamilla Sunitha		
Phone No.	9396848457/8790326282(C)	Email	mamilla_ss@yahoo.com

I hereby confirm that I have given the details of the minor additions and alterations that are required in the above referred flat in the pages attached herein. Please complete the changes suggested by me. I agree to pay the charges, if any, for the additions and alterations that I have asked you to make, as per the rates suggested by you. I shall deliver all the materials that are required to be provided by me at the site on or before _____. In case I fail to deliver these items to the site by the specified date, you may complete the works in the flat as per the standard items provided by you.

Buyers sign		Engg. Sign	
Date:	6/11/20	Date	6/11/20

Note:

1. Colour shades of paints may vary from batch to batch & company to company. The Builder will not take responsibility of quality of work for dark shades especially green & blue.
2. Shade / colour of natural material like marble and granite can't be guaranteed and may vary from lot to lot. Cracks like appearance in marble is a natural feature and Builder shall not be responsible for repairs or replacement.
3. Availability of bathroom or flooring tiles of the same type /colour/make can not be guaranteed and closest possible type/colour/make may be used in its place.
4. No further change shall be permitted from this day.
5. Please sign on all pages.

Buyers sign: Engg. Sign: Date: 6/11/20

Choice of colours:

To be decided later

Changes in flooring:

Bed room 2'x2' vertified, Drawing & Dining & puja
Same as model flat A 105
→ balcony & utility same as model flat A 105
→ MBR wooden tiles.

Buyers sign:

Engg. Sign:

Date: 6/11/20

Changes in electrical points: (mark on plan)

Extra 3 point at marked on plan.

Choice of Bathroom tiles, CP fittings & Sanitary ware:

Same as model flat - A105

Buyers sign:

Engg. Sign:

Date: 6/11/20

Changes in kitchen platform: (mark on plan)

- Same as modular plat.

Other Changes:

-

Buyers sign: Engg. Sign: Date:

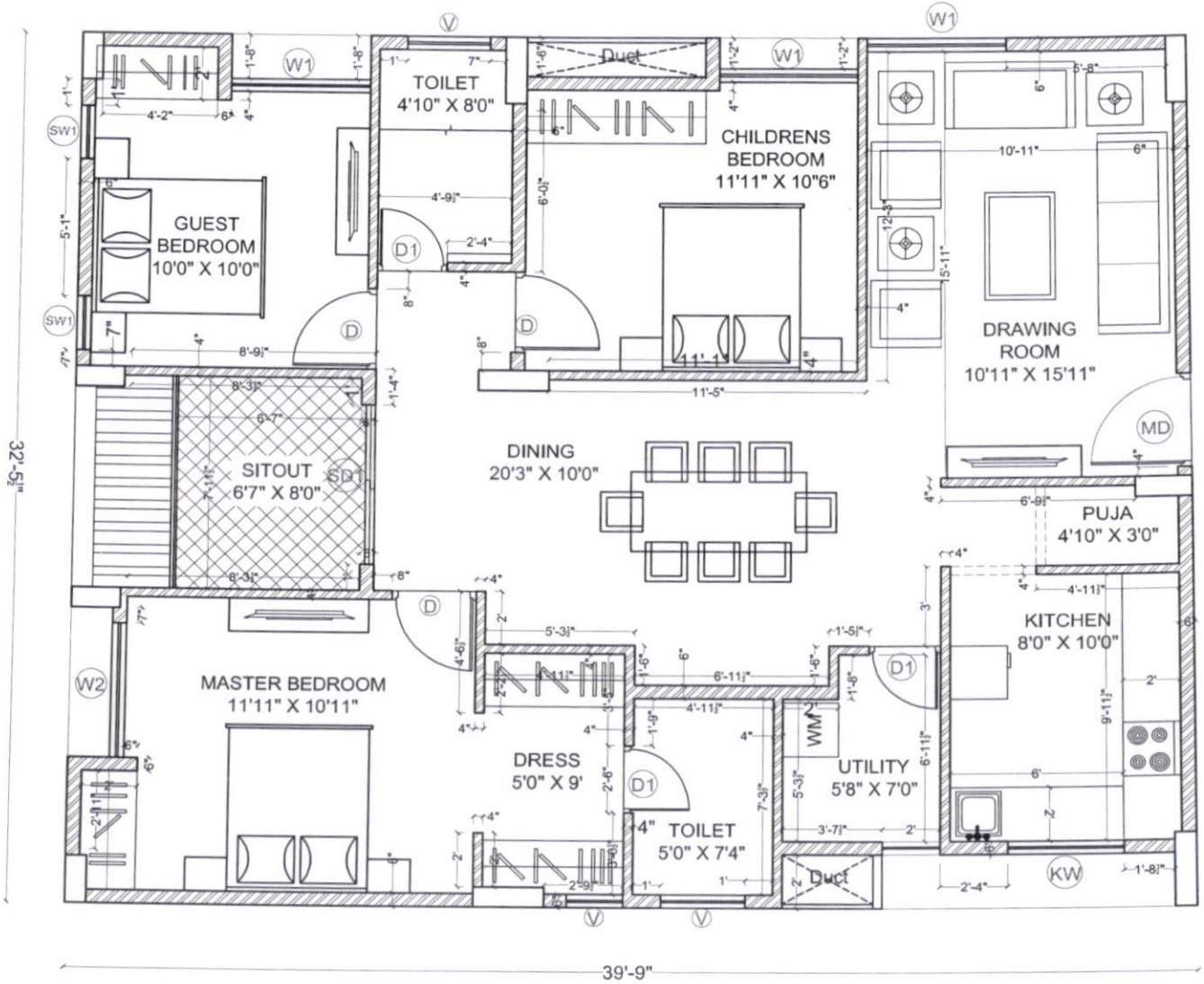

Description	Direction	Owners & Developers :	Date :	18.03.2020	Promoted by
WORKING DRAWING OF FLAT.NO. A-5	N	Modi Properties Pvt Ltd.	Prepared By :		Modi Properties Pvt. Ltd
		Project Name & Phase :	Approved By :	Soham Modi	Phone:+91-40-66335551
		MAYFLOWR PLATINUM	Sca	N.T.S	

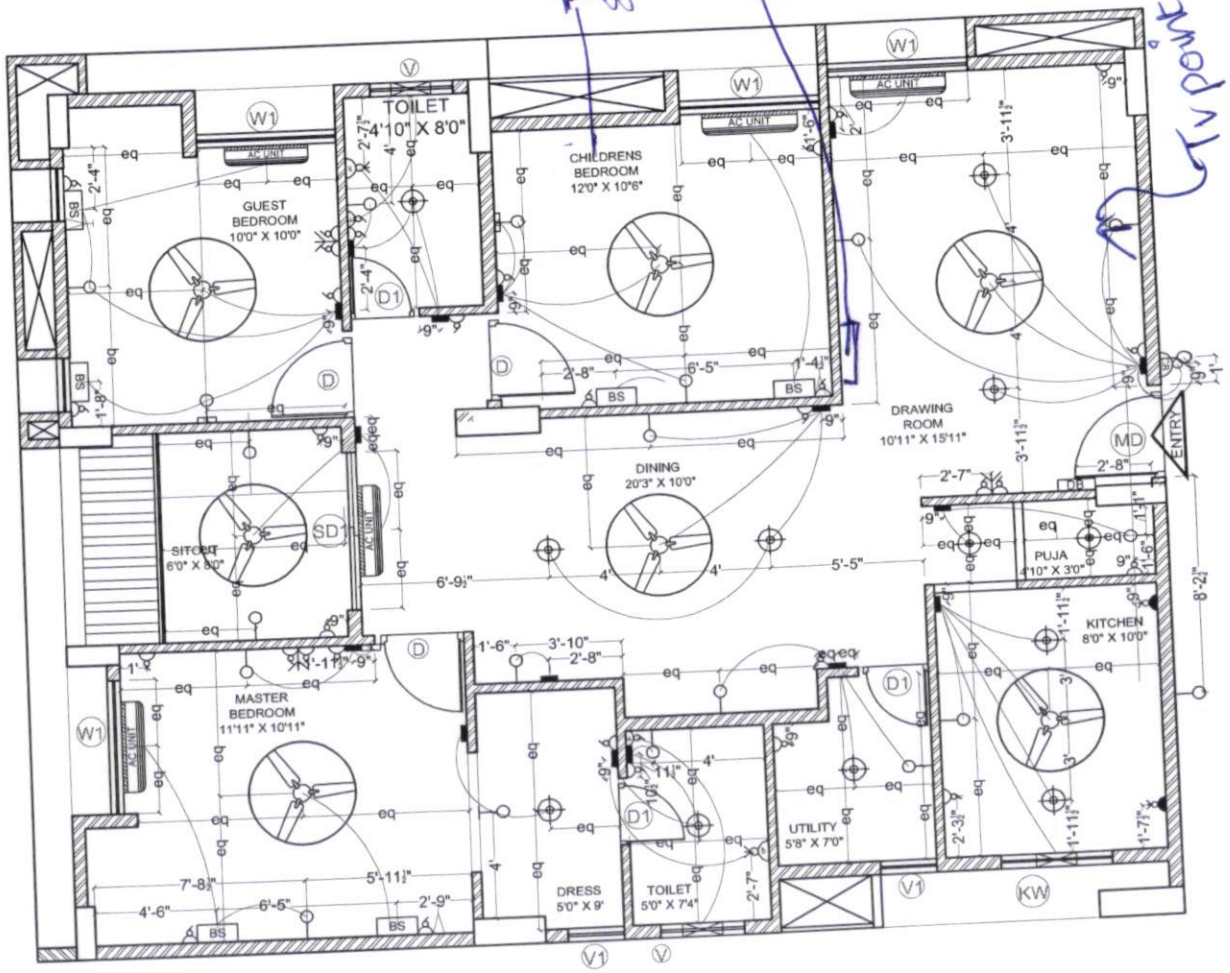

ELECTRICAL LEGEND

SYMBOL	DESCRIPTION	MOUNTING HT.
	5 amp outlet with switch on raw power	3'-6" from FFL
	Geyser Point	8'-3" from FFL
	15 amp outlet with switch on raw power(for fridge)	below counter
	Wall light	6'-6" from FFL
	Ceiling fan	ceiling ht
	TV point	3'-6" from FFL
	Telephone point	3'-6" from FFL
	LAN / Ethernet	3'-6" from FFL
	Ceiling light	ceiling ht
	Switch board	4'-6" from FFL
BS	Bed Side Switch board	2'-0" from FFL
DB	Distribution board	5'-6" from FFL
	Exhaust point	7'-6" from FFL
	AC Point	8'-0" from FFL
	AC Unit	as per standard
CB	Calling bell switch	4'-6" from FFL
	Calling bell	8'-0" from FFL
	Exhaust	7'-0" from FFL

Description	Direction	Owners & Developers :	Date :	02.12.2019	Promoted by
ELECTRICAL PLAN OF FLAT-A5	N	BNC Estates	Prepared By :		Modi Properties & Investments Pvt. Ltd. Phone:+91-40-66335551
		Project Name & Phase :	Approved By :	Soham Modi	
		Mayflower Grande	Scale :	N.T.S	

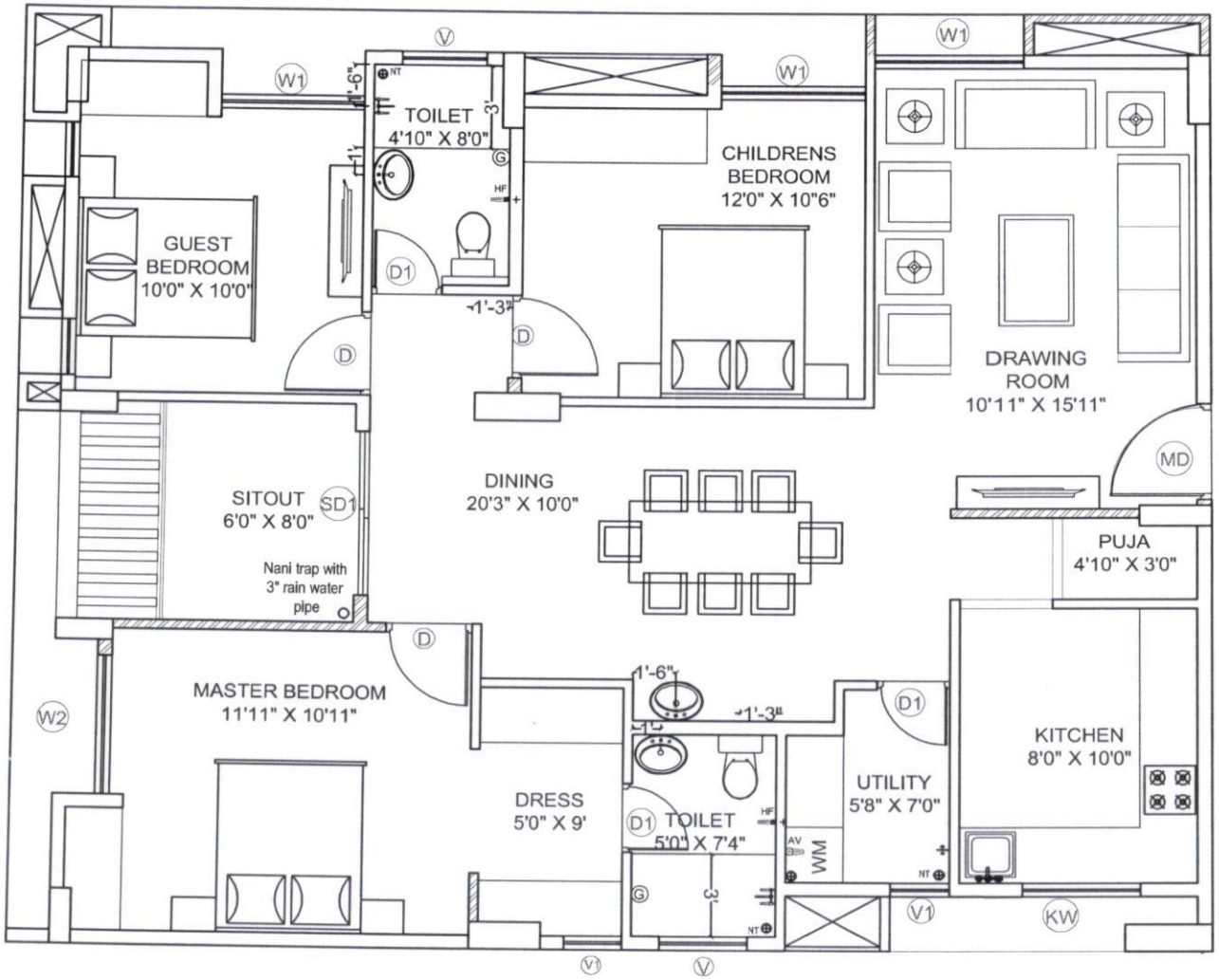

A1

LEGEND

	HEALTH FAUCET
	ANGLE VALVE
	NANI TRAP
	3" RAIN WATER PIPE
	GEASER POINT
	WALL MIXTURE
	TAP / LONG BODY

Description	Direction	Owners & Developers :	Date :	09.01.2020	Promoted by
PLUMBING PLAN OF A5	N	Modi Properties Pvt. Ltd.	Prepared By :		Modi Properties &
		Project Name & Phase :	Approved :	Soham Modi	Investments Pvt. Ltd.
		Mayflower Platinum	Scale :	N.T.S	Phone:+91-40-66335551

Quality Control Check Repot. Stage: After Finishing Stage III (Apartments)

Flat No	A-605	Other		Sl. No.	38041
Company	MPL	Project	MFP	Phase	–
Prepared by	T. Vinod Kumar	Sign	T. Vinod Kumar	Date	27-07-21
Project Manager	Subba reddy	Sign		Date	27-07-21
Previous stage report no.		36957	Report filed and signed by PM		☑ Yes ☐ No
Checked By MD on		MD Sign		For filling	☐ Yes ☐ No

Recommendation:

☐ Stop further work. Submit ATR on QC report to QC team. Proceed only after recheck by QC.
☐ Stop further work. Proceed with work after submitting ATR on QC report to QC team.
☑ Proceed with further work only after making corrections pointed out in the QC report. ATR not required.
☐ Proceed with further work. ATR not required.

Inspection should be done after :

- Completing stage II works.
- Complete works like doors, windows, grills, electrical wiring, switches, french door glass, etc.
- In case of modular kitchen provide platform, granite and dado and modular kitchen in this stage.
- Provide video door phone in this stage.
- Possession for wood work cannot be given until QC check for stage III is completed and all corrections mentioned in the report are made.

Certified that all corrections mentioned in the QC report have been completed. Work can proceed to next stage.

Project in-charge	Sign	Date
		30/7/2021

Miscellaneous check:

Modular kitchen to be provided	☑ Yes ☐ No	Modular kitchen provided	☐ Yes ☑ No
Modular kitchen workman ship	☐ Good ☐ Avg ☐ Poor	Modular kitchen granite & dado workman ship & finishing	☐ Good ☐ Avg ☐ Poor
Video door phone /wifi cam to be provided	☑ Yes ☐ No	Video door phone/wifi cam provided	☐ Yes ☑ No
Painting marks and drops are cleaned from floor, windows, walls.		☐ Good ☑ Avg ☐ Poor	

Quality Control Check Repot. **Stage: After Finishing Stage .II (Apartments)**

S No	Room	Door, door knob & door stopper fitting	Door, door knob & door stopper cleaning	Window grills & quality	Window grills fitting & finishing	Windows quality	Window fitting & finishing	Balcony railing quality & finishing	French door quality & fitting	CP jali quality and fitting	Edge building	Switch boards fitting & covering with plastic covers	Junction box covers painting
		Rate the quality of (Good ✓, Avg. ✕, Poor – needs correction ✕✕, NA)											
1	~~Bedroom 1~~ M.Bed	✓	✓	✓	✓	✓	✓	–	–	–	–	✓	✓
2	~~Bedroom 2~~ C-Bed	✓	✓	✓	✓	✓	✓	–	–	–	–	✓	✓
3	~~Bedroom 3~~ G.Bed	✓	✓	✓	✓	✓	✕✕	–	–	–	–	✕	✓
4	Drawing	✓	✓	✓	✓	✓	✓	–	–	–	–	✓	✓
5	Dining	–	–	✓	✓	✓	✓	–	–	–	–	✓	✓
6	~~Lobby 1~~ Pooja	–	–	–	–	–	–	–	–	–	–	✓	✓
7	~~Utility~~ / balcony 1	–	–	–	–	–	–	✓	✓	✓	–	✓	✓
8	Utility ~~/ balcony~~ 2	✓	✓	–	–	–	–	–	–	✓		✓	✓
9	~~Utility~~ / balcony 3	–	–	–	–	–	–	–	–	–	–	–	–
10	Kitchen	–	–	✓	✓	✓	✓	–	–	–	–	✓	✓
11	~~Toilet 1~~ M.Toi	✓	✓	✓	✓	✓	✕	–	–	✓	–	✓	✓
12	~~Toilet 2~~ C.Toi	✓	✓	✓	✓	✓	✕	–	–	✓	–	✓	✓
13	Toilet 3												
14	Other												
15	Other												

Remarks Note:- 1. In balcony for railing, glass not fixed.
2. For both toilets window handle not locking.
3. In utility for grill (3 no's) screws not fixed.

Construction Division
Additions & Alteration Charges Approval Form

Company Name:	Modi Properties Pvt Ltd	Site	May Flower Platinum
Name of the customer	Mamilla Suntha		
Villa/ Flat No.	A 605		

Sl.No	Description	Amount
1	Total extra Charges	44,860=00
2	Total refundable amount	—
3	Net amount to be charges (if any)	44,860=00
4	Net amount to be refunded (if any)	—

Remarks :

Approved by Project Manager	Approved by Design Team	Approved by MD
Date 26/11/2021	Date	Date
Sign:	Sign:	Sign:

Note: 1. Enclose measurement & estimate sheet. 2. Send scanned copy by email to plans@modiproperties.com & CR. 3. Maintain originals in A&A of customers at site.

ESTIMATE SHEET

Company Name:		MPL		Approved by:			
Project:		May Flower Platinum		Sign:			
Work Description:		Extra Specs					
Flat No.		A-605					
Prepared By		K. Narender Reddy					
Date:		26-11-2021					
S No.	Item Head	Item Description	Quantity	Units	Rate	Amount	Item Head Total
1	Electrical points	5 mps Switch & TV socket point	2.00	nos	500.00	1000.00	
2	Big Tiles	Big tiles laying at Drawing and Dining area, MBR	731.00	sft	60.00	43860.00	
		Total					44860.00

Amount in words - Fourty Four Thousand Eight Hundred and Sixty Rupees only.

26/11/2021

APPROVED BY
26 NOV 2021
S. V. Subba Reddy
Project Manager

MEASUREMENT SHEET

Company Name:	MPL
Project:	May Flower Platinum
Work Description:	Extra Specs
Flat No.	A-605
Prepared By	K. Narender Reddy
Date:	26-11-2021

Approved by:
Sign:

S No.	Item Head	Item Description	Length	Width	Height	Nos.	Quantity	Units	Item Head Total
1	Electrical points	5 amps Switch & TV socket point	1.00	1.00	1.00	2.00	2.00	nos	2.00
2	Big Tiles	Big tiles laying at Drawing and Dining area	731.00	1.00	1.00	1.00	731.00	sft	731.00

APPROVED BY
26 NOV 2021
S. V. Subba Reddy
Project Manager

Quality Control Check Repot. **Stage: After Finishing Stage II (Apartments)**

Flat No	A-605	Other		Sl. No.	37253
Company	MPL	Project	MEP	Phase	—
Prepared by	T. Vinod Kumar	Sign	T. Vinod Kumar	Date	08-03-21
Project Manager	Subba reddy	Sign		Date	08-03-21
Previous stage report no.		36957	Report filed and signed by PM		☑ Yes ☐ No
Checked By MD on		MD Sign		For filling	☐ Yes ☐ No

Recommendation:

☐ Stop further work. Submit ATR on QC report to QC team. Proceed only after recheck by QC.
☐ Stop further work. Proceed with work after submitting ATR on QC report to QC team.
☑ Proceed with further work only after making corrections pointed out in the QC report. ATR not required.
☐ Proceed with further work. ATR not required.

Inspection should be done after:

- Completion of flooring, bathroom /utility tiles, first coat of paint.
- Completion of doors, windows, grills, electrical wiring, switches must be done in next stage
- False ceiling must be completed before flooring.
- Kitchen platform, granite and dado must be completed where modular kitchen is not provided.
- Provide granite soffit for main door and balconies in this stage.

Certified that all corrections mentioned in the QC report have been completed Work can proceed to next stage.

Project in-charge	Sign	Date
		9/3/2021

Miscellaneous check:

Main door fixed with lock & stopper	☑ Yes ☐ No		
Granite soffit for balcony required	☑ Yes ☐ No	Granite soffit for balcony provided	☑ Yes ☐ No
Balcony granite soffit workmanship	☐ Good ☑ Avg ☐ Poor	Balcony granite soffit edge polishing	☐ Good ☑ Avg ☐ Poor
Granite soffit for main door required	☐ Yes ☑ No	Granite soffit for main door provided	☐ Yes ☑ No
Main door granite soffit workmanship	☐ Good ☐ Avg ☐ Poor —	Main door granite soffit edge polishing	☐ Good ☐ Avg ☐ Poor —

Quality Control Check Repot. **Stage: After Finishing Stage II (Apartments)**

	Tiling & granite work	Rate the quality of (Good ✓, Avg. ✗, Poor – needs correction ✗✗, NA)												
S No	Room	Workmanship of tiling	White cement filling around CPVC lines	Corners finishing	Finishing near doors	Finishing on top of tiles	Finishing near ventilators	Step at bathroom entrance / utility	Step for shower / pot wash	Tile joint grouting	Granite platform finishing and edge polishing	Granite platform slope	Granite platform height	Finishing under granite platform
1	~~Toilet 1~~ M.TOI	✓	✓	✓	✓	✓	✓	✓	✓	✓	–	–	–	–
2	~~Toilet 2~~ C.TOI	✓	✓	✓	✓	✓	✓	✓	✓	✓	–	–	–	–
3	~~Toilet 3~~	–	–	–	–	–	–	–	–	–	–	–	–	–
4	~~Toilet 4~~	–	–	–	–	–	–	–	–	–	–	–	–	–
5	Wash basin in dining area	–	–	–	–	–	–	–	–	–	–	–	–	–
6	Kitchen	✓	✓	✓	–	–	✓	–	–	✓	–	–	–	–
7	Utility	✓	✓	✓	✓	✓	–	✓	✓	✓	–	–	–	–
8	Other													
9	Other													
Remarks														

Quality Control Check Repot. **Stage: After Finishing Stage II (Apartments)**

	Flooring & painting		Rate the quality of (Good ✓, Avg. ✗, Poor – needs correction ✗✗, NA)												
S No	Room	Color variation of floor tiles	Flooring workman ship & grouting	Skirting size (3")	Skirting workmanship	Plastering above skirting	Plastering & finishing of walls	Crack filling	Loft Finishing	Windows check	General quality of painting & finishing	Door & frame painting quality	Door beading, luppam and painting quality.	Edge building
1	~~Bedroom 1~~ M.Bed	✓	✓	✓	✓	✓	✓	—	—	✓	✓	✓	✓	✓
2	~~Bedroom 2~~ C.Bed	✓	✓	✓	✓	✓	✓	—	—	✓	✓	✓	✓	✓
3	~~Bedroom 3~~ G.Bed	✓	✓	✓	✓	✓	✓	—	—	✓	✓	✓	✓	✓
4	Drawing	✓	✓	✓	✓	✓	✓	—	—	✓	✓	✓	✓	✗
5	Dining	✓	✓	✓	✓	✓	✓	—	—	—	✓	—	—	✓
6	~~Lobby 1~~ Pooja	✓	✓	✓	✓	✓	✓	—	—	—	✓	—	—	✓
7	~~Utility~~ / balcony 1	✓	✓	✓	✓	✓	✓	—	—	—	✓	—	—	✓
8	Utility / ~~balcony 2~~	✓	✓	✓	—	✓	✓	—	—	—	—	✓	✓	✓
9	~~Utility / balcony 3~~	—	—	—	—	—	—	—	—	—	—	—	—	—
10	Kitchen	✓	✓	✓	✓	✓	✓	—	✓	✓	✓	—	—	✓
11	Other													
12	Other													

Remarks Note:- Flat to be cleaned.

Quality Control Check Repot. **Stage: After Plumbing & Electrical (Apartments)**

Flat No.	A - 605	Other	Type - 1	Sl. No.	36957
Company	MPL	Project	MFP	Phase	–
Prepared by	Akheel	Sign		Date	27/1/21
Project Manager	Subba Reddy	Sign		Date	27/1/21
Previous stage report no.		36175	Report filed and signed by PM?		☑ Yes ☐ No
Additions & alterations sheet date		6/11/2020	All pages signed by engineer & customer?		☑ Yes ☐ No
Checked By MD on		MD Sign		For filling	☐ Yes ☐ No

Recommendation:
- ☐ Stop further work. Submit ATR on QC report to QC team. Proceed only after recheck by QC.
- ☐ Stop further work. Proceed with work after submitting ATR on QC report to QC team.
- ☑ Proceed with further work only after making corrections pointed out in the QC report. ATR not required.
- ☐ Proceed with further work. ATR not required.

Inspection should be done after:
- after cleaning the apartment.
- before starting painting, tiling & flooring.
- electrical conduct, waterproofing & plumbing work is completed (for stage II only).
- additions & alterations is finalized and signed. In case there are no additions and alterations printout of email by PM to CR confirming the same must be filed.
- additions & alterations sheets to be transferred to QC file, QC to check if A&A are made as per request.

Certified that all corrections mentioned in the QC report have been completed. Work can proceed to next stage.

Project in-charge	Sign	Date
		28/01/2021

After Plumbing & Electrical Check.

Notes:
1. Mark ✓ for correct or minor mistake which does not require correction
2. Mark ✕ for minor mistake that requires minor correction.
3. Mark ✕✕ for major mistake that requires correction by replacement or re-fixing.
4. Mark ✕✕✕ for major mistake that cannot be corrected.
5. Location of CPVC & PVC fittings must be checked as per measurements given in circular. Tolerance 1".
6. Location, height and spirit level of electrical points must be checked as per measurements given in circular & plan. Tolerance 1".
7. Civil work near pipes in balcony & utility must be neat and mortar should be removed from the pipes.
8. Water proofing must cover all pipes & check height above SFL.
9. Fasteners must be used as specified in circular. Especially check fixing of PVC pipes.
10. Height of DB box must be 6" below false ceiling level or 12" below slab level.
11. In case of many changes in civil work, electrical work and plumbing work, a new drawing must be prepared at HO and approved by MD.

Quality Control Check Repot. **Stage: After Plumbing & Electrical (Apartments)**

S No	Room	Civil work near pipes in balcony & utility[7] (✓ or ✗)	CPVC & PVC Check[5] (✓ or ✗)	Electrical points check[6] (✓ or ✗)	Water proofing check [8] (✓ or ✗)	Proper use of fasteners check [9] (✓ or ✗)	Placement of DB[10] (✓ or ✗)	Placement of Generator changeover (✓ or ✗)
1	Bedroom 1 MB	—	—	✓	—	—	—	—
2	Toilet 1 MT	✓	✓	✓	✓	✓	—	—
3	Bedroom 2 KB	—	—	✓	—	—	—	—
4	Toilet 2 CT	✓	✓	✓	✓	✓	—	—
5	Bedroom 3 GB	—	—	✓	—	—	—	—
6	~~Toilet 3~~	—	—	—	—	—	—	—
7	Drawing	—	—	✓	—	—	✓	✓
8	Dining	—	—	✓	—	—	—	—
9	~~Lobby 1~~	—	—	—	—	—	—	—
10	~~Utility~~ / balcony 1	✓	✓	✓	—	—	—	—
11	Utility / ~~balcony 2~~	✓	✓	✓	✓	✓	—	—
12	Utility / ~~balcony 3~~	—	—	—	—	—	—	—
13	Kitchen	✓	✓	✓	—	—	—	—
14	Other Pooja	—	—	✓	—	✓	—	—
15	Other							

Remarks ① DB box to be place at proper height.

Remarks on additions & alteration sheet; 6/01/2020

Signed by engineer,	☑ Yes ☐ No	Signed by customer,	☑ Yes ☐ No
Revised drawing required from HO	☐ Yes ☐ No —	Approved revised drawing attached	☐ Yes ☐ No —

Miscellaneous check	
Screeding done on walls upto 12" outside bathroom utility	☑ Yes ☐ No
Bathroom utility filled with 4" water for water proof check	☐ Yes ☑ No
Hole packing done around all pipes in ceiling and internal walls	☑ Yes ☐ No

Remarks:

A-605

APPROVED BY
10 FEB 2020
SOHAM MODI
MANAGING DIRECTOR

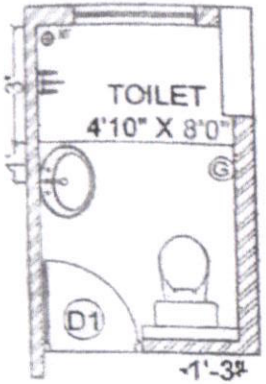

Type-A1

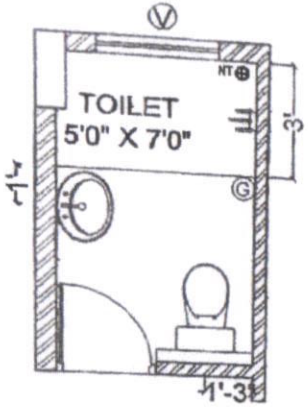

Type-A2

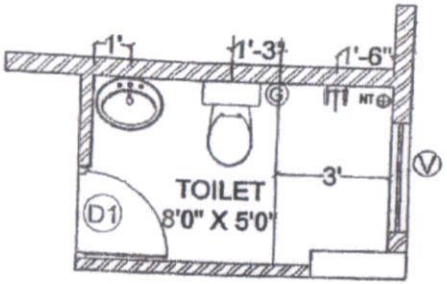

Type-A7

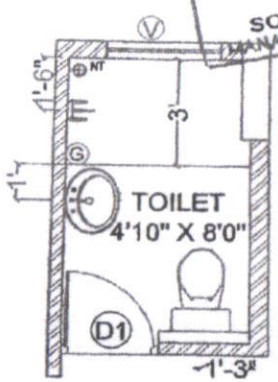

Type-B1

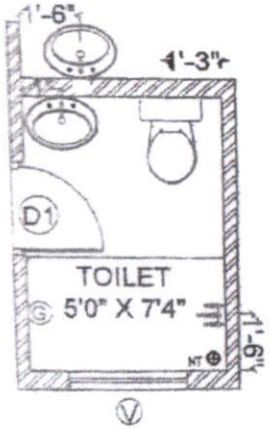

Type-A1

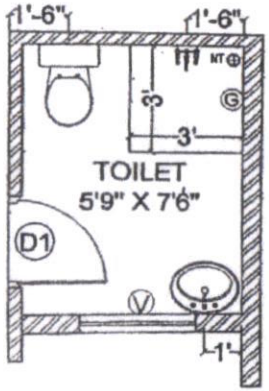

Type-A2

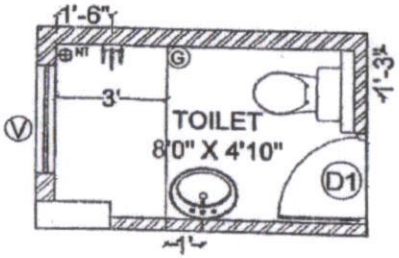

Type-A7

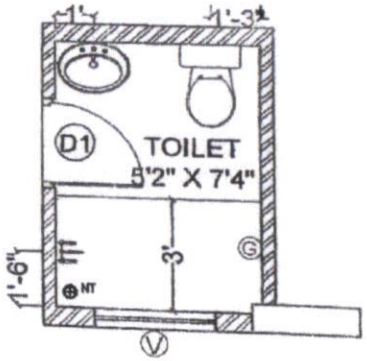

Type-B1

Description	Direction	Owners & Developers :	Date :	08.02.2020	Promoted by
QC PLUMBING CHECK PLAN OF A - BLOCK	N	Modi Properties Pvt. Ltd.	Prepared By :		Modi Properties &
		Project Name & Phase :	Approved By :	Soham Modi	Investments Pvt. Ltd.
		Mayflower Platinum	Scale :	N.T.S	Phone:+91-40-66335551

A-605

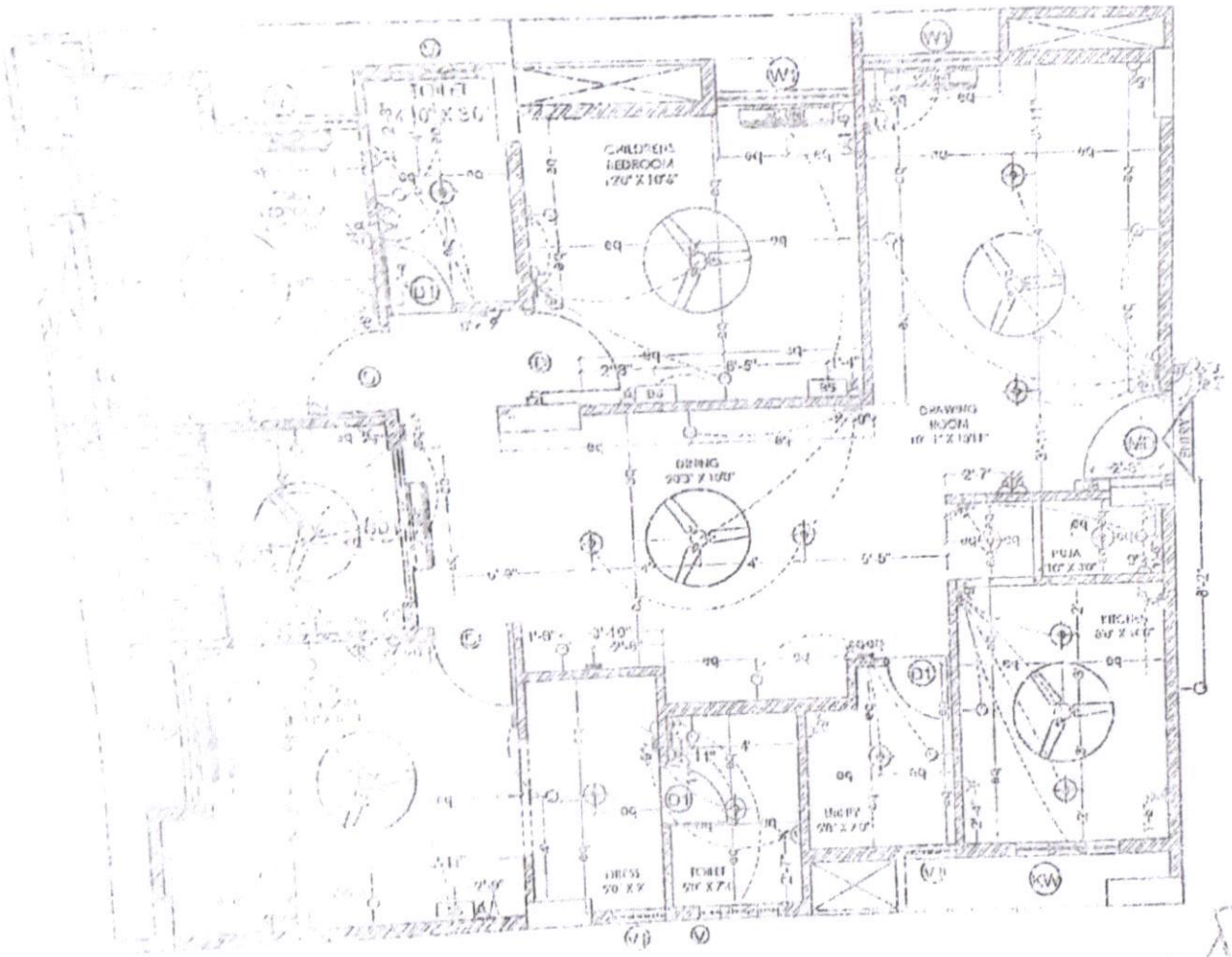

ELECTRICAL LEGEND		
SYMBOL	DESCRIPTION	MOUNTING HT.
	5 amp outlet with switch on raw power	3'-6" from FFL
	Geyser Point	8'-6" from FFL
	15 amp outlet with switch on raw power(for fridge)	Under counter
	Wall light	[illegible]
	Ceiling fan	[illegible]
	TV point	[illegible]
	Tele phone point	[illegible]
	LAN / Ethernet	[illegible]
	Ceiling light	[illegible]
	Switch board	[illegible]
	Bed Side Switch board	[illegible]
	Distribution board	[illegible]
	Exhaust point	[illegible]
	AC Point	[illegible]
	AC Unit	[illegible]
	Ceiling bell switch	4'-0" from FFL
	Ceiling bell	3'-0" from FFL
	Exhaust	7'-0" from FFL

APPROVED BY
02 DEC 2019
SOHAM MODI
MANAGING DIRECTOR

Direction	Owners & Developers :	Date :	02.12.2019	Promoted by
N	BNC Estates	Prepared By :		Modi Properties & Investments Pvt. Ltd.
	Project Name & Phase :	Approved By :	Soham Modi	Phone: +91-40-66335551
	Mayflower ~~Grande~~ Platinum	Scale :	N.T.S	

[illegible] ELECTRICAL CHECK PLAN OF BLOCK A
[illegible] ESTATES

Quality Control Check Repot. **Stage: After Plastering (Apartments)**

Flat No.	A - 605	Other	—	Sl. No.	36174
Company	MPL	Project	MFP	Phase	—
Prepared by	G. RAJESH	Sign		Date	09/10/20
Project Manager	Subha Reddy	Sign		Date	09/10/20
Previous stage report no.		35791	Report filed and signed by PM?		☑ Yes ☐ No
Checked By MD on		MD Sign		For filling	☐ Yes ☐ No

Recommendation:
- ☐ Stop further work. Submit ATR on QC report to QC team. Proceed only after recheck by QC.
- ☐ Stop further work. Proceed with work after submitting ATR on QC report to QC team.
- ☑ Proceed with further work only after making corrections pointed out in the QC report. ATR not required.
- ☐ Proceed with further work. ATR not required.

Inspection should be done after:
- brickwork & 2 coats plastering is completed
- after cleaning the apartment.
- water proofing, screeding in bathrooms is completed.
- before starting painting, tiling & flooring.

Certified that all corrections mentioned in the QC [illegible] have been completed. Work can [illegible] to next stage.

Project in-[illegible]	Sign	Date
S.V.S. Reddy		9/10/2020

Plastering Check.

Notes:
1. Mark ✓ for correct or minor mistake which does not require correction
2. Mark ✕ for minor mistake that requires minor correction.
3. Mark ✕✕ for major mistake that requires correction by replacement or re-fixing.
4. Mark ✕✕✕ for major mistake that cannot be corrected.
5. 9"unplastered area from SFL should be left including in common areas and terraces.
6. Windows must be checked with templates. Plastering must be 3mm margin for luppum work. Tolerance ¼".
7. Provision of tiles in bathrooms, kitchen & wash areas (rough plastering).
8. Check size of sink bowl. Hole should be 1" to 2" larger. (Tolerance: 1").
9. All doors frames should have ½"grooves.
10. Sill top must be of uniform thickness, correct height, at one level & without broken edges.

Quality Control Check Repot. **Stage: After Plastering (Apartments)**

S No	Room	Skirting Provision (✓ or ✗)	Finishing around door frame (✓ or ✗)	Beams & columns finishing (✓ or ✗)	Finishing of lofts (✓ or ✗)	Electrical junctions finishing (✓ or ✗)	Window check[6] (✓ or ✗)	Tiles provision (✓ or ✗)	Sink provision & size (✓ or ✗)	Grooves for door frames (✓ or ✗)	Balcony & terrace sill top finishing(✓ or ✗)	Screeding in bathroom & utility (✓ or ✗)	Screeding in 6" above FFL? (✓ or ✗)
1	Bedroom 1 M.B	✓	✓	✓	—	✓	—	—	—	✓	—	—	—
2	Toilet 1 M.T	—	✓	✓	—	✓	—	✓	—	✓	—	✓	✓
3	Bedroom 2 K.B	✓	✓	✓	—	✓	—	—	—	✓	—	—	—
4	Toilet 2 K.T	—	✓	✓	—	✓	—	✓	—	✓	—	✓	✓
5	Bedroom 3 G.B	✓	✓	✓		✓	✗	—	—	✓	—	—	—
6	~~Toilet 3~~	—	—	—	—	—	—	—	—	—	—	—	—
7	Drawing	✓	✓	✓	—	✓	✗	—	—	—	—	—	—
8	Dining	✓	—	✓	—	✓	✗	—	—	—	—	—	—
9	~~Lobby 1~~	—	—	—	—	—	—	—	—	—	—	—	—
10	~~Utility~~ / balcony 1	✓	—	✓	—	✓	—	—	—	—	✓	—	—
11	Utility / ~~balcony 2~~	—	✓	✓	—	✓	—	✓	—	✓	—	✓	✓
12	~~Utility / balcony~~ 3	—	—	—	—	—	—	—	—	—	—	—	—
13	Kitchen	✓	—	✓	✓	✓	✗	✓	—	—	—	—	✓
14	Other												
15	Other												

Remarks Note: 1. window Templates was not checked, Due to External scaffolding

2. Grooves should be ½" for all Door frames.

Quality Control Check Repot. **Stage: After Brickwork (Apartments)**

Flat No.	A-605	Others		Sl. No.	35791
Company	MPL	Project	MEP	Phase	—
Prepared by	V. Sambeth	Sign		Date	25/07/2020
Project Manager	SubbaReddy	Sign		Date	25/07/2020
Previous stage report no.		35631	Report filed and signed by PM?		☑ Yes ☐ No
Apartment No		Other		Other	
Checked By MD on		MD Sign		For filling	☐ Yes ☐ No

Recommendation:
- ☐ Stop further work. Submit ATR on QC report to QC team. Proceed only after recheck by QC.
- ☐ Stop further work. Proceed with work after submitting ATR on QC report to QC team.
- ☐ Proceed with further work only after making corrections pointed out in the QC report. ATR not required.
- ☑ Proceed with further work. ATR not required.

Inspection should be done after:
- brickwork is completed
- chicken mesh fixed
- after cleaning the apartment
- electrical conducting work is completed

Brickwork Check.

Notes:
1. Mark ✓ for correct or minor mistake which does not require correction
2. Mark ✕ for minor mistake that requires minor correction.
3. Mark ✕✕ for major mistake that requires correction by replacement or re-fixing.
4. Mark ✕✕✕ for major mistake that cannot be corrected.
5. Wall thickness should be as per plan. Use of 4", 6" & 8" blocks must be checked.
6. All walls should have 2 beds of about 2"to 3"thickmess with one no. 6 mm or 8 mm rod with M15 CC.
7. Chicken mesh should be used in each and every joint between RCC & Brickwork.
8. Joint between brickwork & beam on external side must be filled.
9. Check room dimensions with working plan. (Tolerance: 1")
10. Diagonals of each room shall be equal. (Tolerance: 2")
11. Balcony sill level should be 3'3"from SFL. (Tolerance: 1")
12. Check room height with specified height. (Tolerance: 1")
13. Check plumb of walls where ever it appears to be out of plumb. (Tolerance: 1/2")
14. Specify the No. of beams which are not aligned by more than 1"in a room.
15. Door frames must have black Japan coating and wood primer / pellambar – at cost of painter.

Certified that all corrections mentioned in the QC report have been completed Work can proceed to next stage.

Project in-charge	Sign	Date
S.V.S.Reddy		28/7/2020

Quality Control Check Repot. Stage: After Brickwork (Apartments)

S No	Room	Wall thickness (✓ or X)	Beds in walls (✓ or X)	Chicken mesh (✓ or X)	External brickwork & beam joint (✓ or X)	Room Dimensions (✓ or X)	Room Dimensions - Difference in inches	Diagonal (✓ or X)	Diagonal - Difference in inches	Balcony sill level (✓ or X)	Room Height (✓ or X)	Plumb of walls (Good/Avg./Bad)	Alignment of beams and walls - Nos.
1	Bedroom 1 M.B	✓	✓	✓	✓	✓	✓	✓	✓	–	✓	Avg	✓
2	Toilet 1 M-Toi	✓	✓	✓	✓	✓	✓	✓	✓	–	✓	"	✓
3	Bedroom 2 K.B	✓	✓	✓	✓	✓	✓	✓	✓	–	✓	"	✓
4	Toilet 2 C.Toi	✓	✓	✓	✓	✓	✓	✓	✓	–	✓	Good	✓
5	Bedroom 3 G.B	✓	✓	✓	✓	✓	✓	✓	✓	–	✓	"	✓
6	~~Toilet 3~~	–	–	–	–	–	–	–	–	–	–	–	–
7	Drawing	✓	✓	✓	✓	✓	✓	✓	✓	–	✓	Avg	✓
8	Dining	✓	✓	✓	✓	✓	✓	✓	✓	–	✓	"	✓
9	~~Lobby 1~~	–	–	–	–	–	–	–	–	–	–	–	–
10	~~Utility~~ / balcony 1	✓	✓	✓	✓	✓	✓	✓	✓	✓	✓	Avg	✓
11	Utility / ~~balcony~~ 2	✓	✓	✓	✓	✓	✓	✓	✓	–	✓	"	✓
12	~~Utility / balcony~~ 3	–	–	–	–	–	–	–	–	–	–	–	–
13	Kitchen	✓	✓	✓	✓	✓	✓	✓	✓	–	✓	Good	✓
14	Other												
15	Other												

Remarks

Quality Control Check Repot. **Stage: After Brickwork (Apartments)**

Quality of edges and corners in all rooms?	☑ Good ☐ Avg. ☐ Bad
Specify rooms that need correction:	—

Misc. Checks.

Was 3.75 CFT proportion box provided?	☑ Yes ☐ No
Condition of proportion box?	☐ Good ☑ Avg. ☐ Bad
Was the Apartment cleaned before starting brick work?	☐ Yes ☐ No ☑ Cant' say
Is the Apartment cleaned for plastering?	☑ Yes ☐ No
Wastage?	☐ High ☐ Medium ☑ Low
Storage of building material like bricks sand and cement.	☐ Good ☑ Avg. ☐ Bad
Drum (200 lts) provided for curing in each flat?	☐ Yes ☐ No —
Remarks:	

Door Frames & Windows check

Notes:

1. Mark ✓ for correct or minor mistake which does not require correction
2. Mark ✕ for minor mistake that requires minor correction.
3. Mark ✕✕ for major mistake that requires correction by replacement or re-fixing.
4. Mark ✕✕✕ for major mistake that cannot be corrected.
5. Window template depth should be between 2 to 2 ½"after plastering.
6. Lentil level should be 7'3"from SFL & 7'from FFL. (Tolerance 1")
7. Lofts should be at a height of 7'to 7'3" from FFL. Kitchen plat from should be at a height of 32"or 33"from FFL and 35" or 36"from SFL . (Tolerance 1")
8. Slopes of lofts and kitchen platforms to be checked by using 12"spirit level and check height from floor from 2 or 3 points.
9. Thickness of platforms & lofts should be between 2 & 2.5".
10. Provide single layer table brick at bottom of each door frame without threshold.

Quality Control Check Repot. Stage: After Brickwork (Apartments)

S No	Room	Door size, face and position (✓ or X)	Brick at bottom of door frame (✓ or X)	Door lentil level (✓ or X)	Door diagonal check (✓ or X)	Door Plumb - two sides (✓ or X)	Door frame black Japan/ wood primer/Peelambar check (✓ or X)	Windows lentil & sill level (✓ or X)	Windows size (✓ or X)	Windows - template depth & diagonal (✓ or X)	Windows - template powder coated (✓ or X)	Loft & Kitchen platform required ? (Yes or No)	Loft & Kitchen platform provided (✓ or X or NA)	Loft & Kitchen platform slope (✓ or X)
1	Bedroom 1 MB	✓	✓	✓	✓	✓	✓	✓	✓	✓	✓	–	–	–
2	Toilet 1 M-Toi	✓	✓	✓	✓	✓	✓	✓	✓	✓	✓	–	–	–
3	Bedroom 2 KB	✓	✓	✓	✓	✓	✓	✓	✓	✓	✓	–	–	–
4	Toilet 2 C-Toi	✓	✓	✓	✓	✓	✓	✓	✓	✓	✓	–	–	–
5	Bedroom 3 GB	✓	✓	✓	✓	✓	✓	✓	✓	✓	✓	–	–	–
6	~~Toilet 3~~	–	–	–	–	–	–	–	–	–	–	–	–	–
7	Drawing	✓	✓	✓	✓	✓	✓	✓	✓	✓	✓	–	–	–
8	Dining	–	–	–	–	–	–	–	–	–	–	–	–	–
9	~~Lobby 1~~	–	–	–	–	–	–	–	–	–	–	–	–	–
10	~~Utility~~ / balcony 1	–	–	–	–	–	–	–	–	–	–	–	–	–
11	Utility / ~~balcony 2~~	✓	✓	✓	✓	✓	✓	✓	✓	✓	✓	–	–	–
12	~~Utility / balcony 3~~	–	–	–	–	–	–	–	–	–	–	–	–	–
13	Kitchen	–	–	–	–	–	–	✓	✓	✓	✓	Yes	✓	✓
14	Other													
15	Other													

Remarks:

Cc: Sumanth Mamilla; Shyam Sunder Mamilla
Subject: Modification and Alteration of Flat reg..,

Dear Sir/Madam,

Greetings, I am Sunitha Mamilla, owner of Flat No:605, A-block, wanted bring to your kind notice for alteration of Flat.

1. Tiles of Drawing and Dining room to be changed with new modified latest tiles as per your suggested price.

2. Small alteration of TV point to be given at right side of the wall of Entrance instead of left side you are providing.

3. Very small alteration of the plumbing work which will be advised at the time of fixation.

A common request personally that Fencing of sit out is MS and its look is very poor, with light weight. So I kindly request you to modify it

better looking SS made material.

Thanks with Regard,

Mrs. Sunitha Mamilla,

W/O Dr. Shyam Sunder Mamilla.

From: mamilla shyam sunder [mailto:mamilla_ss@yahoo.com]
Sent: 14 June, 2020 5:36 PM
To: vineela@modiproperties.com; G. B. Rambabu
Cc: Sumanth Mamilla; Shyam Sunder Mamilla
Subject: Modification and Alteration of Flat reg..,

Dear Sir/Madam,

Greetings, I am Sunitha Mamilla, owner of Flat No:605, A-block, wanted bring to your kind notice for alteration of Flat.

1. Tiles of Drawing and Dining room to be changed with new modified latest tiles as per your suggested price.

2. Small alteration of TV point to be given at right side of the wall of Entrance instead of left side you are providing.

3. Very small alteration of the plumbing work which will be advised at the time of fixation.

A common request personally that Fencing of sit out is MS and its look is very poor, with light weight. So I kindly request you to modify it better looking SS made material.

Thanks with Regard,

Mrs. Sunitha Mamilla,

W/O Dr. Shyam Sunder Mamilla.

----- Forwarded message -----
From: mamilla shyam sunder <mamilla_ss@yahoo.com>
To: "vineela@modiproperties.com" <vineela@modiproperties.com>; G. B. Rambabu <gbrambabu@modiproperties.com>
Cc: Sumanth Mamilla <sumanth.mamilla39@gmail.com>; Shyam Sunder Mamilla <mamillass1239@gmail.com>
Sent: Sunday, 14 June, 2020, 05:36:20 pm IST
Subject: Modification and Alteration of Flat reg..,

Dear Sir/Madam,

Greetings, I am Sunitha Mamilla, owner of Flat No:605, A-block, wanted bring to your kind notice for alteration of Flat.
1. Tiles of Drawing and Dining room to be changed with new modified latest tiies as per your suggested price.
2. Small alteration of TV point to be given at right side of the wall of Entrance instead of left side you are providing.
3. Very small alteration of the plumbing work which will be advised at the time of fixation.

A common request personally that Fencing of sit out is MS and its look is very poor, with light weight. So I kindly request you to modify it better looking SS made material.

Thanks with Regard,
Mrs. Sunitha Mamilla,
W/O Dr. Shyam Sunder Mamilla.