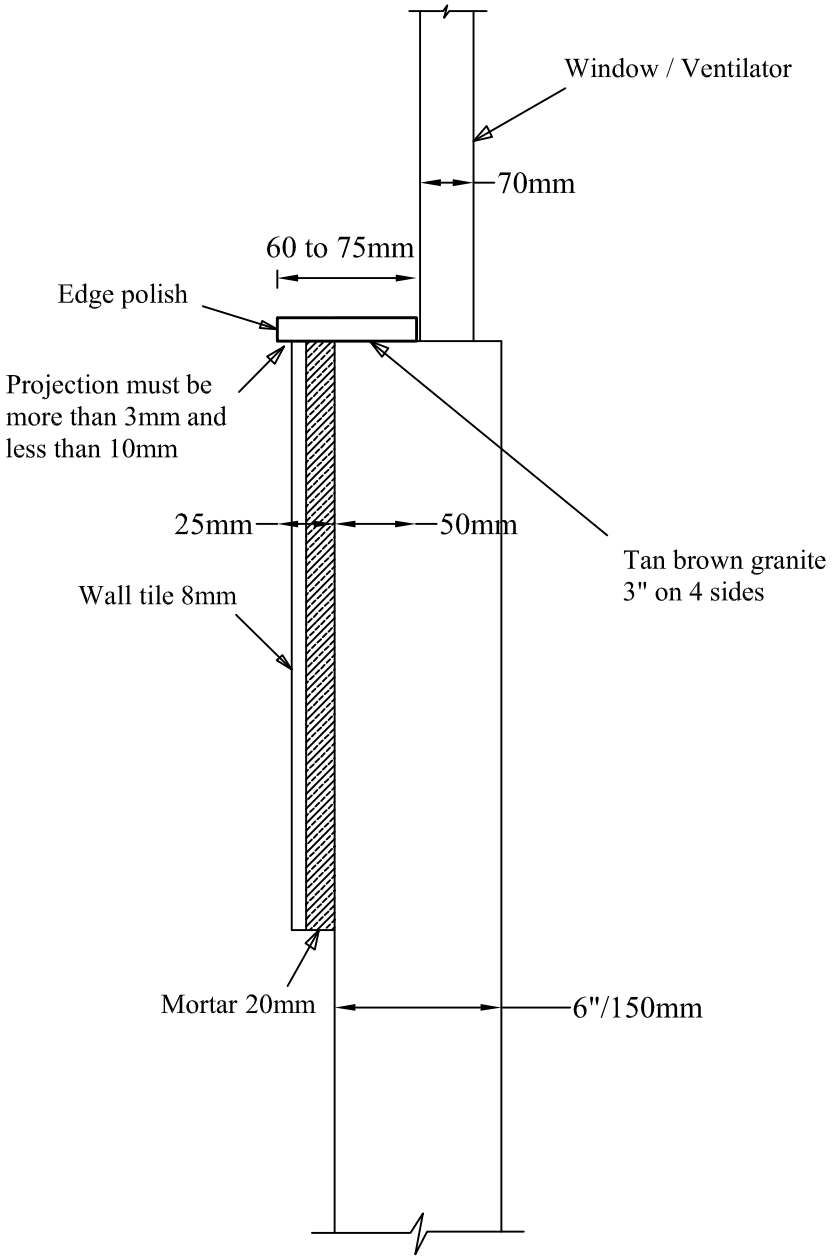

FINISHING OF TILES NEAR WINDOW AND VENTILATOR
FIG.NO.002

SCALE	: NTS
DATE	: 01.09.21
REV	:
CHECKED BY:	Soham Modi
DEALT BY	: M.Nagalaxmi

MODI PROPERTIES

Modi Properties &
Investments pvt. ltd.
4-5-187/3&4,IInd floor,
M.G.Road,Sec-bad-500 003.
Ph-66335551.