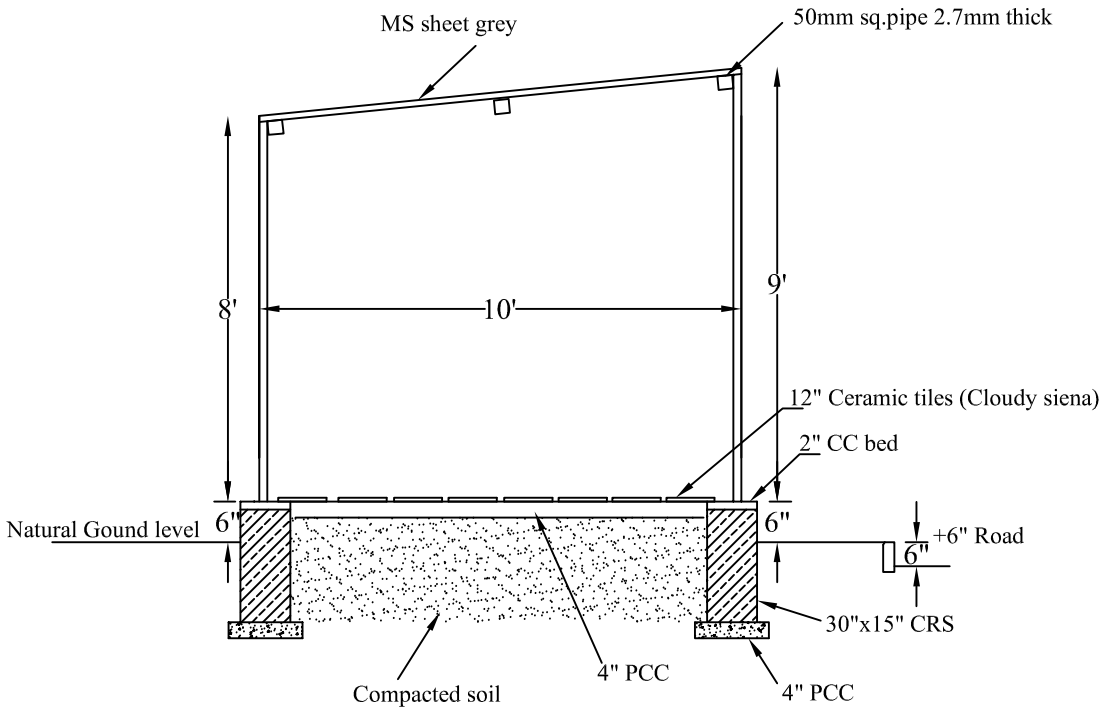

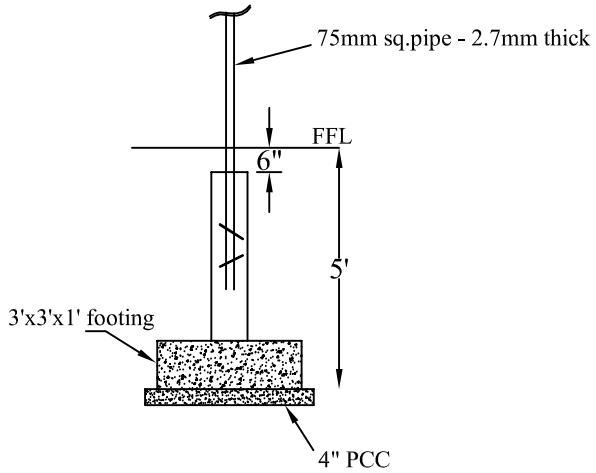

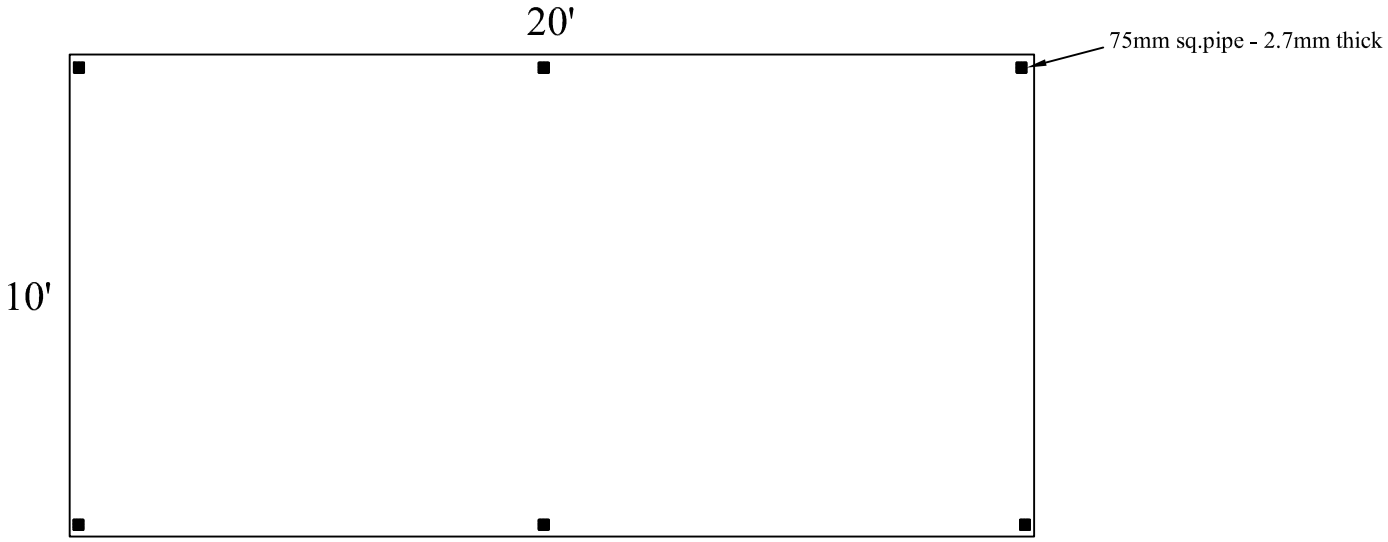

Description	Direction	Date :	10.07.17	Promoted by
SALES KIOSK, TEMPORARY SITE OFFICE FIG.NO.26	N	Approved By :	Soham Modi	Modi Properties Pvt.Ltd. Phone:+91-40-66335551
		Prepared By :	M.Nagalaxmi	
		Scale :	N.T.S	