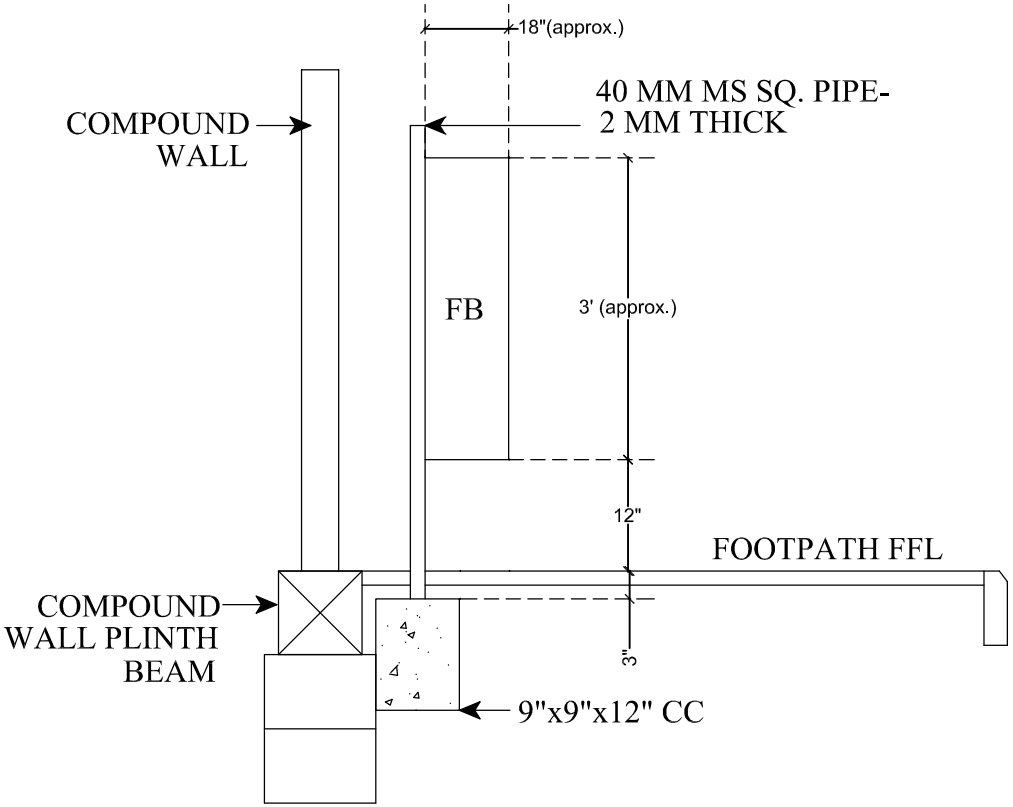

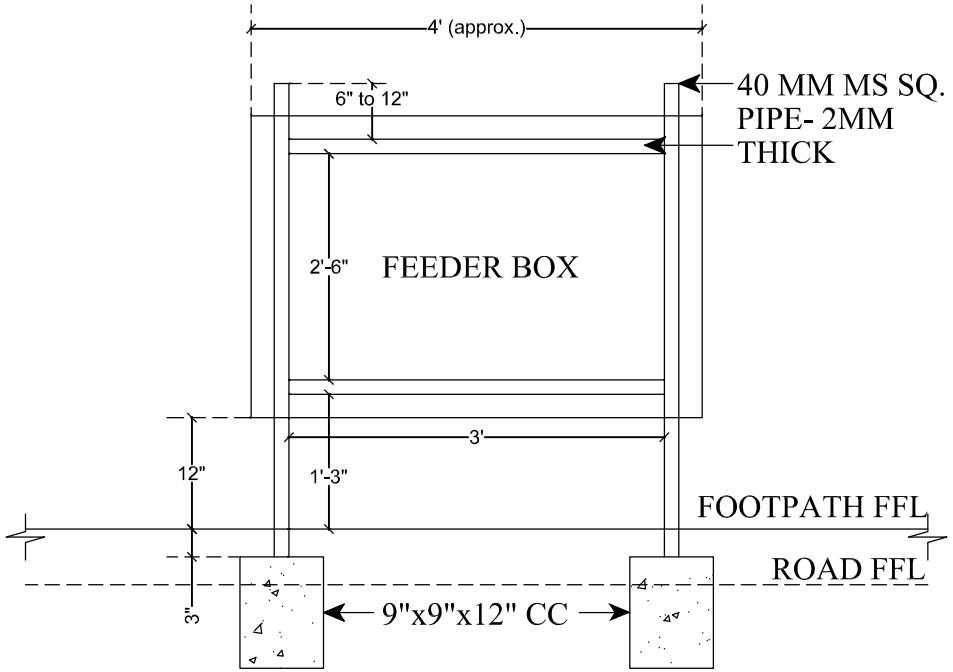

Description	Direction	Owners & Developers :	Date :	25/05/18	Promoted by
VILLAS - FEEDER BOX - ERECTION PLAN FIG. NO. 55	N	Modi Properties Pvt Ltd.	Prepared By :	Madhav	Modi Properties Pvt. Ltd. Phone:+91-40-66335551
		Project Name & Phase :	Approved By :	Soham Modi	
		Nilgiri Estates	Scale :	N.T.S	