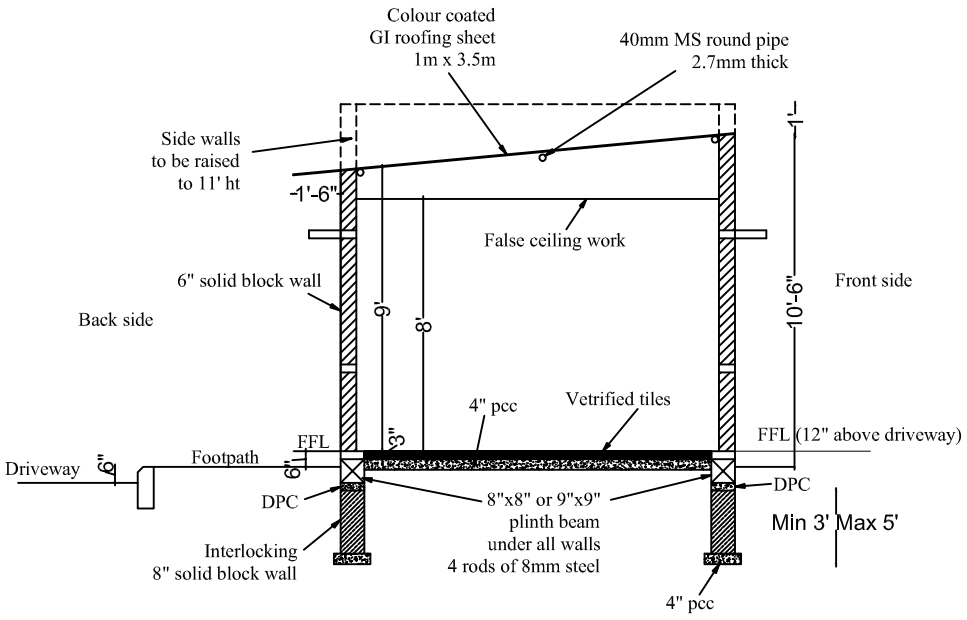

CROSS-SECTION

D1 - 3'-0" x 7'-0"
D2 - 2'-6" x 7'-0"
W - 4'-0" x 4'-0"
V - 3'-0" x 2'-0"

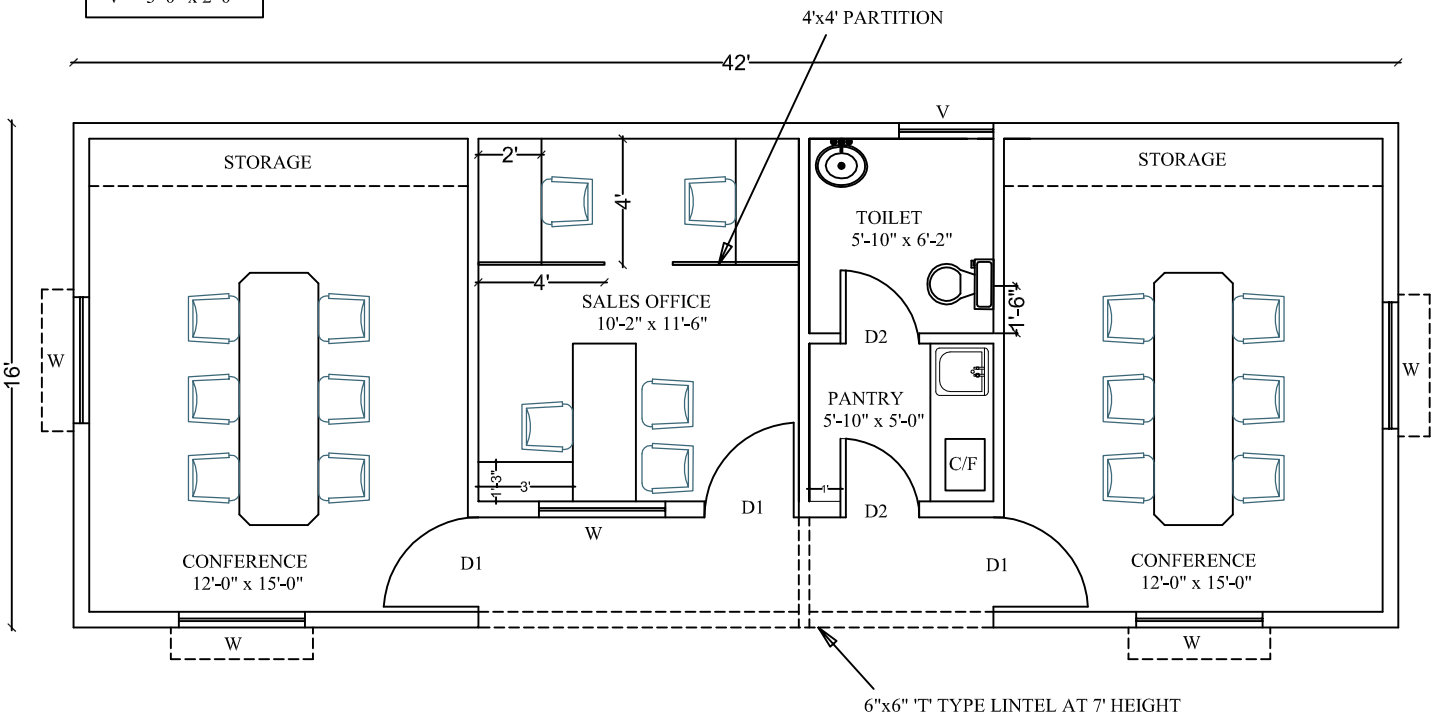

PLAN

Description	Direction	Owners & Developers :	Date :	18.07.19	Promoted by
STANDARD DRAWING OF SITE OFFICE FIG.NO.66	N	Modi Properties & Investment Pvt Ltd.	Prepared By :		Modi Properties & Investments Pvt. Ltd. Phone:+91-40-66335551
		Project Name & Phase :	Approved By :	Soham Modi	
			Scale :	N.T.S	