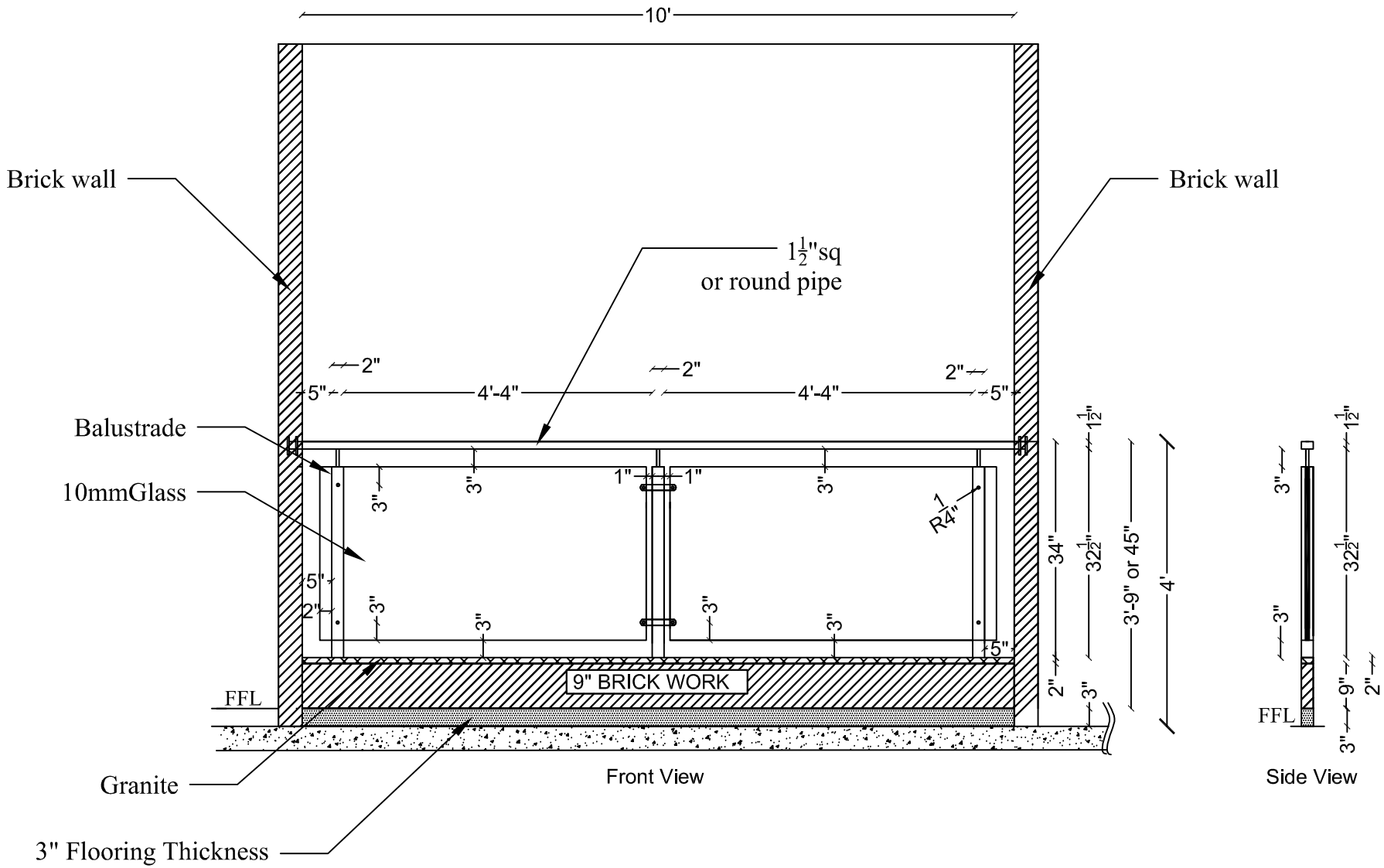

*From FFL 45" & From Slab 48"

Description	Direction	Owners & Developers :	Date :	2.09.2020	Promoted by
STANDARD GLASS RAILING DESIGN 10' FOR MPL FIG.NO.79	N		Prepared By :	Jayapradha	Modi Properties Pvt Ltd
		Project Name & Phase :	Approved By :	Soham Modi	
		MPL	Scale :	N.T.S	Phone:+91-40-66335551