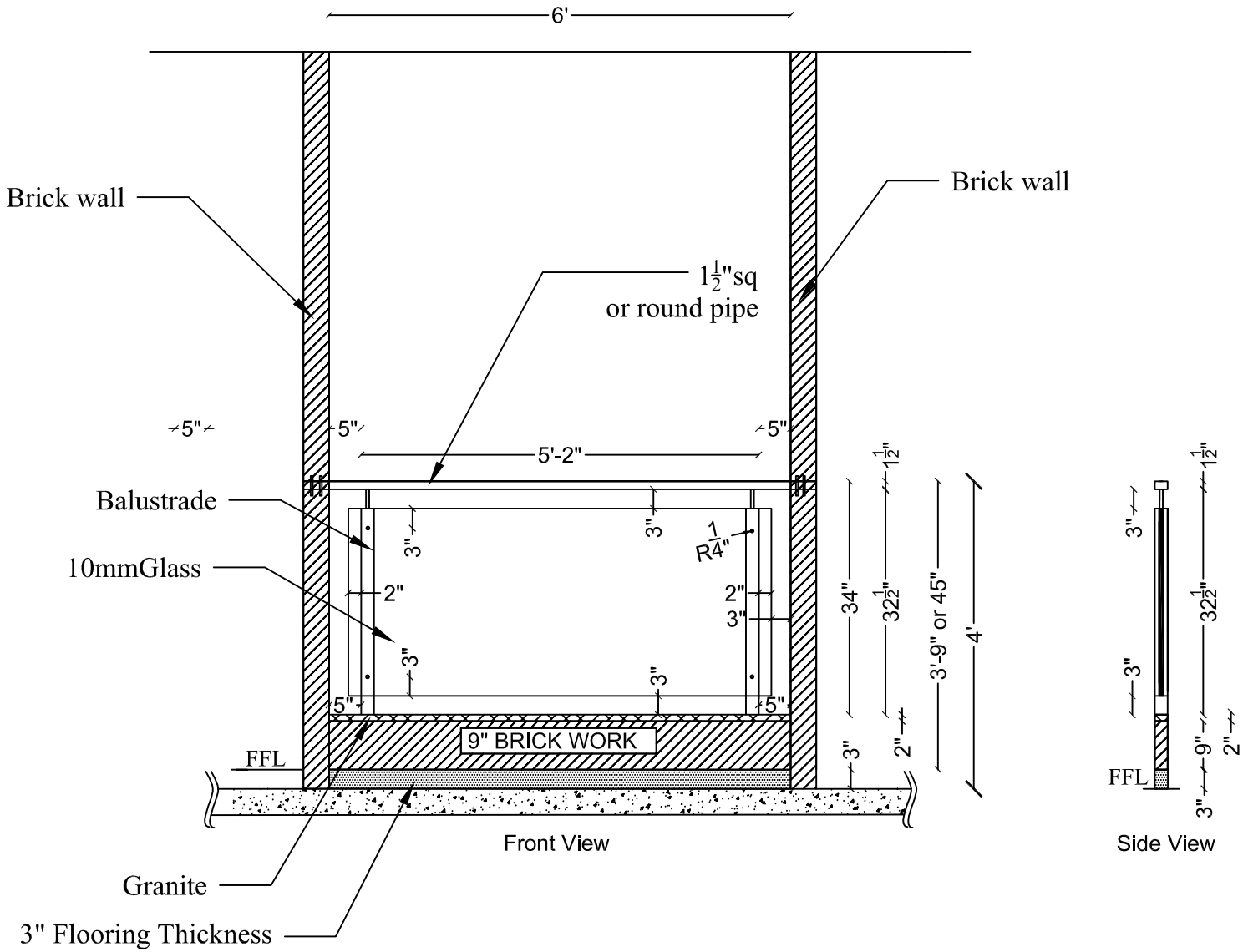


*From FFL 45" & From Slab 48"

| Description | Direction | Owners & Developers : | Date : | 09.09.2020 | Promoted by |
|---|---|---|---|---|---|
| STANDARD GLASS RAILING DESIGN FOR 6' | N | | Prepared By : | Jayapradha | Modi Properties Pvt Ltd |
| FIG.NO.79 | | Project Name & Phase : | Approved By : | Soham Modi | |
| | | | Scale : | N.T.S | Phone:+91-40-66335551 |